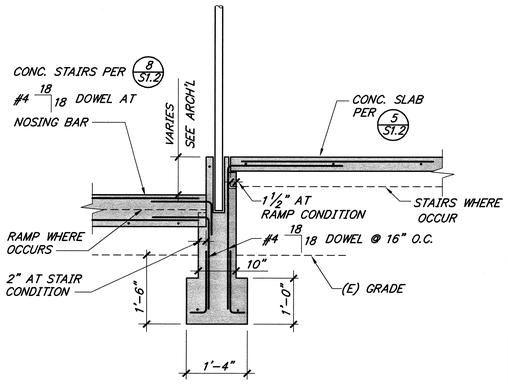

NOTE:
FOR INFO NOT SHOWN, SEE 7/S1.2

RAMP AND STAIR SECTION | 3/4" | 1

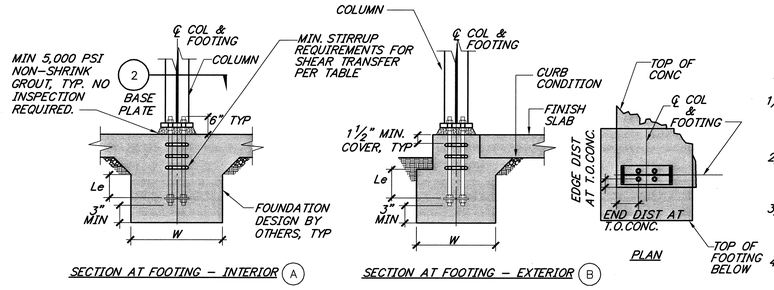

HARDY FRAME® MOMENT FRAME: EMBED SCHEDULE [1]

COL.	EMBED CALLOUT[5]	ASD ALLOWABLE LOADS (LBS)[6]		EMBED FROM TOP OF FOOTING L_e (IN)	MINIMUM FOOTING WIDTH, W[10]	MIN EDGE & END DIST AT FTG (IN)	MIN EDGE DIST AT T.O. CONC (IN)[8]	MIN END DIST AT T.O. CONC (IN)[9]	BOLT DIA (IN) & (QTY)[3]	MIN STIRRUP SIZE & SPACING[7]
		SHEAR, V[7]	UPLIFT, P							
D18/ D18H	MF-B	13,100	14,200	18	5'-0"	27	2⅝	7⅜	1⅛ (4)	3-#5 AT 2"
		19,000	7,000							

NOTES:

1) ALL ANCHOR BOLTS ARE ASTM A307 1/2x3x3 ASTM A36 PLATE WASHERS ARE DOUBLED NUTTED ON THE EMBED END OF ANCHOR BOLTS.
2) THE "EMBED CALLOUT" IS USED TO SPECIFY THE EMBEDMENT REQUIREMENTS ON THE FOUNDATION PLAN.
3) ALLOWABLE SHEAR AND UPLIFT VALUES SHOWN ARE THE MAXIMUM ALLOWABLE LOAD PER COLUMN BASE OR GROUP OF BOLTS.
4) EDGE DISTANCE IS DEFINED AS THE DISTANCE FROM THE EDGE OF CONCRETE TO THE CENTERLINE OF THE BOLT PERPENDICULAR TO THE DIRECTION OF THE SHEAR FORCE.
5) END DISTANCE IS DEFINED AS THE DISTANCE FROM THE EDGE OF CONCRETE TO THE CENTERLINE OF THE BOLT IN THE DIRECTION OF THE SHEAR FORCE.

ANCHOR BOLT EMBEDMENT | NONE | 2

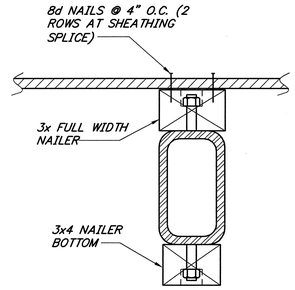

NOTE:
BOTTOM NON-STRUCTURAL NAILER MAY BE REMOVED AND REPLACED WITH A THINNER NAILER

SECTION AT BEAM HANGING JOIST | NONE | 3

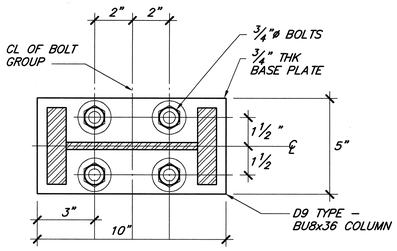

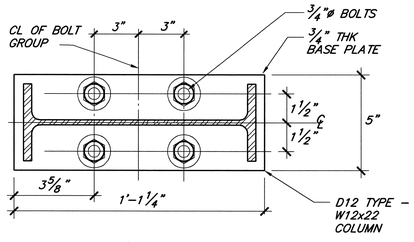

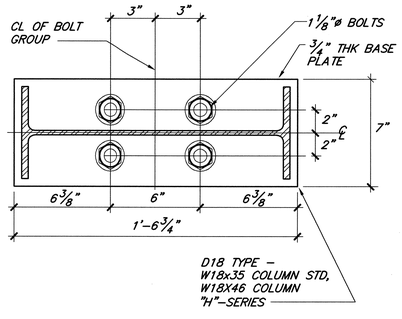

STANDARD PINNED COLUMN BASE

STANDARD BASE PLATES AND EDGE VIEW | NONE | 4

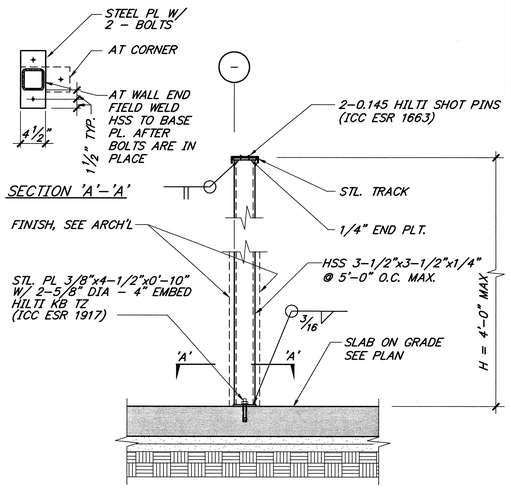

PONY WALL DETAIL | NONE | 5

NOT USED | - | 6

NOT USED | - | 7

NOT USED | - | 8

NOT USED | - | 9

NOT USED | - | 10

HMC ARCHITECTS
Architecture Interiors Planning
3546 CONCOURS STREET
ONTARIO, CALIFORNIA 91764
Telephone: 909 . 989 . 9979
Fax: 909 . 483 . 1400
www. hmcarchitects .com

CONSULTANT SEAL

REGISTERED PROFESSIONAL ENGINEER TERRY C. TSANG No.S2992 Exp. 06/30/2010 STRUCTURAL STATE OF CALIFORNIA

CONSULTANT
TMAD TAYLOR & GAINES
• STRUCTURAL • MECHANICAL • ELECTRICAL • CIVIL
800 North Ferrari Lane, Suite 100
Ontario, California 91764
Phone: 909.477.6915 Fax 909.477.6919
www.tmadtg.com
Project No. 4009.080.00

KEY PLAN

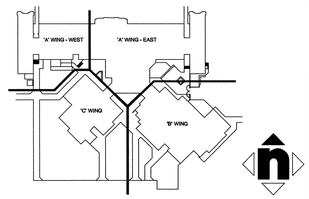

AGENCY APPROVAL

IDENTIFICATION STAMP
DIV. OF THE STATE ARCHITECT
04 - 106133
AC____ FLS____ SS____
DATE_____

PROJECT TITLE

RAMONA-ALESSANDRO ELEMENTARY SCHOOL
MODERNIZATION
670 RAMONA AVENUE
SAN BERNARDINO, CA 92411

© HMC GROUP 2003

NO.	REVISIONS	DATE	NO.	REVISIONS	DATE
1	DSA ADDENDUM # 1				2/10/10

DRAWING TITLE

ARCHITECT SEAL

LICENSED ARCHITECT CHRISTOPHER PHILLIPS LICENSE NO. C-19759 EXP. 02-24-11 STATE OF CALIFORNIA

DESIGNED JC	PROJECT NO. 3137117
DRAWN AM	SCALE AS NOTED
CHECKED TT	DRAWING NO. S1.3
DATE 19 MAR 2004	

N:\40.CAD\TGProjects\4009_Projects\4009.080\Structural\4009080_S1.3.dwg Fri., 05 Feb. 2010 – 12:17pm Plotted by: dsanchez

PLEASE RECYCLE

Feb 05, 2010 - 12:17pm

" BID ISSUANCE SET"