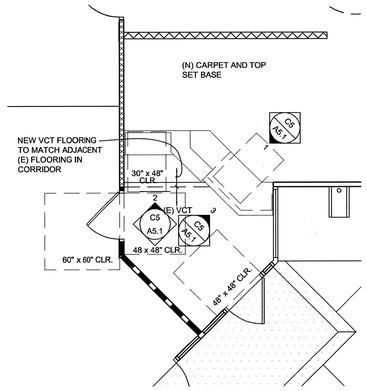

INTERIOR RAMP AT ENTRY-ELEVATION | D2 | 1/4" = 1'-0"

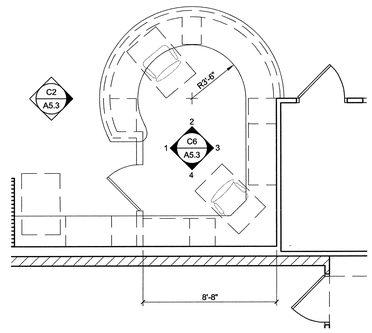

LIBRARY RECEPTION DESK - ENLARGED PLAN | D3 | 1/4" = 1'-0"

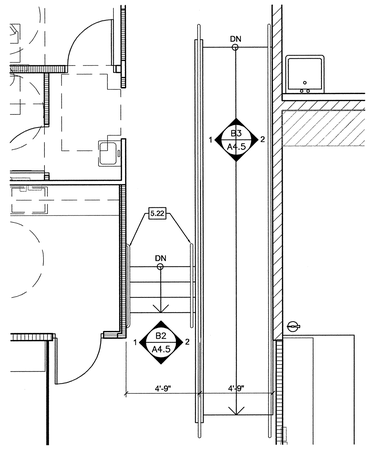

RAMP ENLARGED REMODEL PLAN - BLDG. 'B' | D5 | 1/4" = 1'-0"

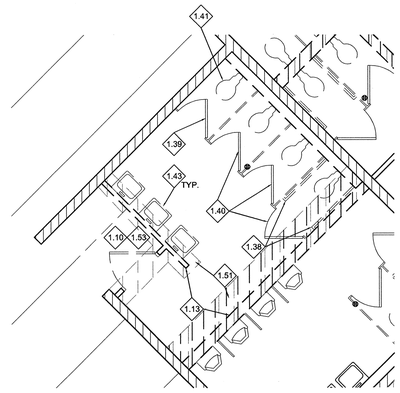

GIRLS TOILET DEMOLITION PLAN-ROOM B14 | D6 | 1/4" = 1'-0"

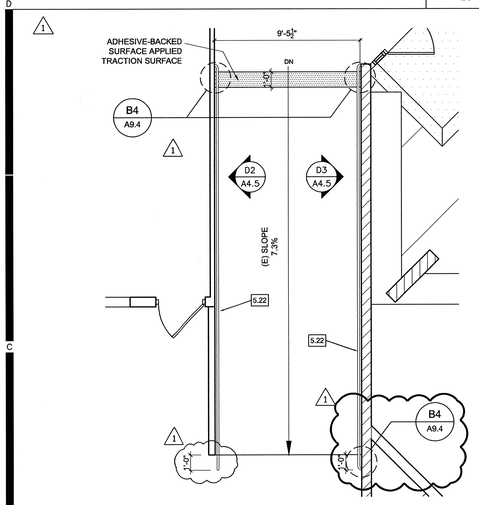

INTERIOR RAMP AT ENTRY-REMODEL PLAN | B2 | 1/4" = 1'-0"

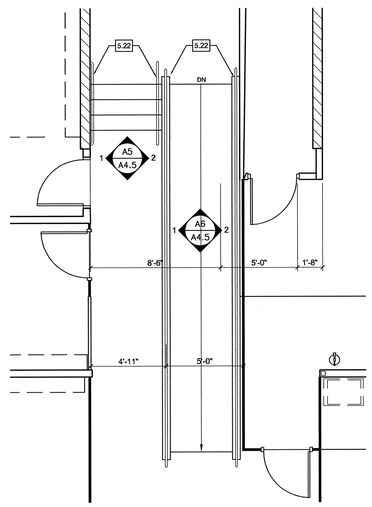

WHEELCHAIR LIFT REMODEL-ROOM C8 | B3 | 1/4" = 1'-0"

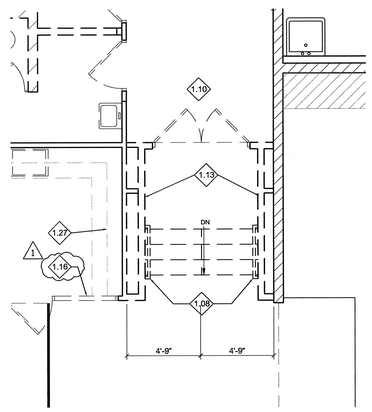

RAMP ENLARGED DEMO PLAN - BLDG. 'B' | B5 | 1/4" = 1'-0"

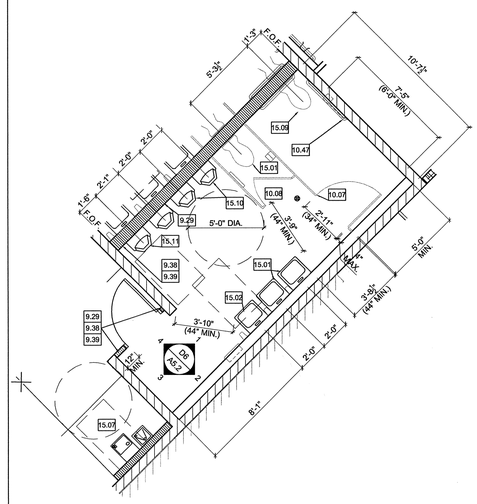

BOYS TOILET REMODEL PLAN-ROOM B13 | B6 | 1/4" = 1'-0"

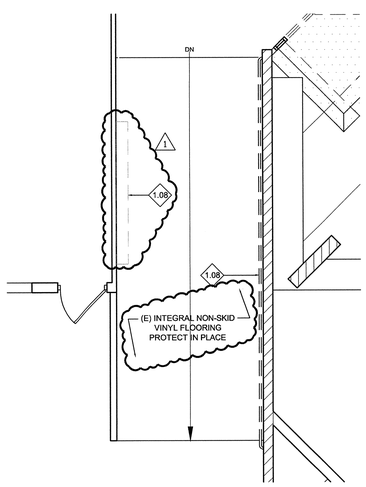

INTERIOR RAMP AT ENTRY-DEMOLITION PLAN | A2 | 1/4" = 1'-0"

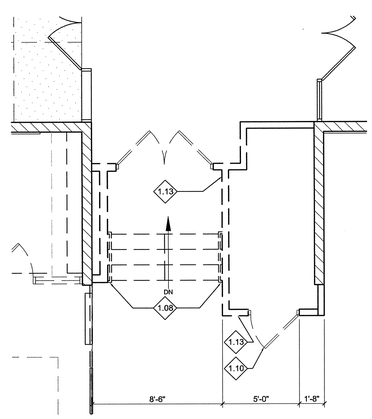

WHEELCHAIR LIFT DEMOLITION | A3 | 1/4" = 1'-0"

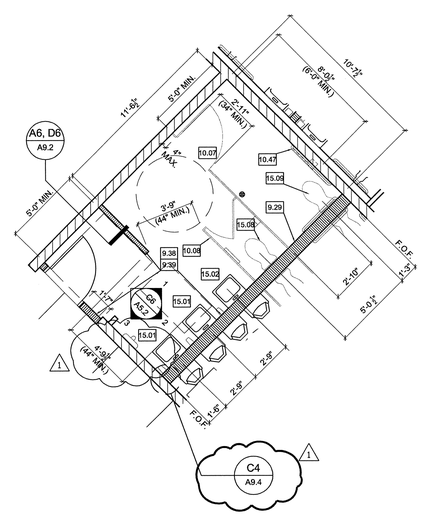

GIRLS TOILET REMODEL PLAN-ROOM B14 | A5 | 1/4" = 1'-0"

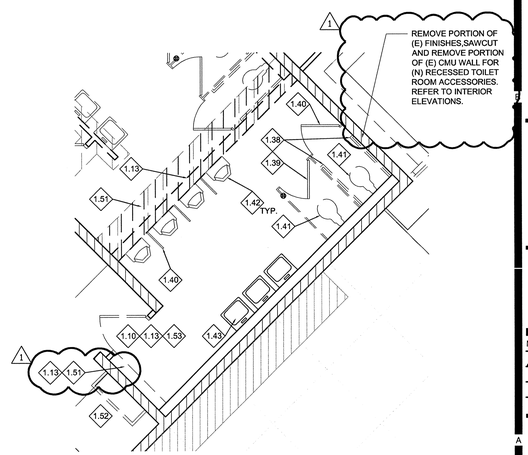

BOYS TOILET DEMOLITION PLAN-ROOM B13 | A6 | 1/4" = 1'-0"

HMC ARCHITECTS
Architecture Interiors Planning
3546 CONCOURS STREET
ONTARIO, CALIFORNIA 91764
Telephone: 909 . 989 . 9979
Fax: 909 . 483 . 1400
www. hmcarchitects .com

KEYNOTES

DEMOLITION KEYNOTES — 1.38 DEMOLITION KEYNOTE SYMBOL

1.08 REMOVE GUARDRAIL/HANDRAIL
1.09 REMOVE DOOR
1.10 REMOVE DOOR AND FRAME
1.13 REMOVE WALL AND FINISHES COMPLETELY. PROTECT ADJACENT FINISHES
1.14 REMOVE PORTION OF WALL, FRAME OPENING FOR (N) DOOR AND FRAME PER DETAIL A6/A9.2 & A6, B6, C6/A9.4
1.16 REMOVE WALL, ALUMINUM DOOR AND WINDOWS
1.27 REMOVE CASEWORK
1.35 REMOVE TOILET ROOM ACCESSORIES
1.36 REMOVE PAPER TOWEL DISPENSER
1.37 REMOVE SOAP DISPENSER
1.38 REMOVE GRAB BARS
1.39 REMOVE AND RELOCATE TOILET PARTITIONS
1.40 REMOVE TOILET PARTITION
1.41 REMOVE WATER CLOSET, REFER TO PLUMBING DWGS.
1.42 REMOVE URINAL, REFER TO PLUMBING DWGS.
1.43 REMOVE LAVATORY, REFER TO PLUMBING DWGS.
1.51 REMOVE PORTION OF CERAMIC TILE FLOOR, PATCH AND REPAIR
1.52 REMOVE DRINKING FOUNTAIN, REFER TO PLUMBING DWGS.
1.53 REMOVE DOOR HARDWARE, PREP. FOR NEW HARDWARE
1.59 REMOVE PORTION OF SLAB AS REQUIRED FOR WHEELCHAIR LIFT
1.99 REMOVE AND RELOCATE (E) TRAPHY CASE

CONSTRUCTION KEYNOTES — 5.22 CONSTRUCTION KEYNOTE SYMBOL

A. CONTRACTOR TO INCLUDE ALL WORK AND MATERIALS NECESSARY TO FULLY COMPLETE ALL ITEMS REQUIRED.
6.22 GUARD RAIL/HANDRAIL PER DETAIL A4.B/A9.4
6.30 WOOD HANDRAIL
8.01 DOOR FRAME AT NEW DOOR OPENING PER DETAIL A6/A9.2 & A6, B6, C6/A9.4
8.02 DOOR AND HARDWARE
9.29 CERAMIC TILE THINSET FULL HEIGHT
9.38 CERAMIC TILE PATCH AND REPAIR AT WALLS TO MATCH ADJACENT FINISHES
9.39 CERAMIC TILE PATCH AND REPAIR AT FLOOR AND BASE
10.07 PLASTIC TOILET PARTITION PER DETAILS A1,B1,C1/A9.1
10.08 (E) PLASTIC TOILET PARTITIONS RELOCATED PER DETAILS A1,B1,C1/A9.1
10.47 GRAB BAR PER DETAIL C3, D1/A9.2
14.05 WHEELCHAIR LIFT PER DETAILS D5, D6 & E6/A9.4
15.01 LAVATORY, REFER TO PLUMBING DWGS.
15.02 ACCESSIBLE LAVATORY
15.07 ACCESSIBLE DRINKING FOUNTAIN PER DETAIL C3/A9.1
15.08 WATER CLOSET, REFER TO PLUMBING DWGS.
15.09 ACCESSIBLE WATER CLOSET
15.10 URINAL, REFER TO PLUMBING DWGS.
15.11 ACCESSIBLE URINAL

CONSTRUCTION LEGEND

- EXISTING WALLS TO REMAIN
- EXISTING 1 HR. RATED WALL-2X4 WOOD STUDS AT 16" O.C. WALL FINISH TO BE EXTENDED TO THE UNDERSIDE OF THE ROOF SHEATHING
- EXISTING AREA SEPARATION WALLS 2 HR. RATED WALL ¾" NEAT WOOD FIBERED PLASTER AND MEATL LATH ON 2X4 WOOD STUDS AT 16" O.C., FINISH FLOOR TO BOTTOM OF ROOF SHEATHING
- EXISTING CMU WALLS
- NEW NON-RATED INTERIOR WOOD STUD WALL PER DETAILS A6, D6/ A9.2 & A6, B6, C6/A9.4 DOOR INFILL PER DETAIL A5/A9.2. NEW CURB AT RESTROOM WALLS PER DETAILS A4, E5/A9.2
- NEW RATED INTERIOR WOOD STUD WALL PER DETAILS A6, D6/ A9.2 & A6, B6, C6/A9.4 DOOR INFILL PER DETAIL A5/A9.2. NEW CURB AT RESTROOM WALLS PER DETAILS A4, E5/A9.2
- EXISTING CONSTRUCTION TO BE REMOVED

CONSULTANT SEAL | CONSULTANT

KEY PLAN

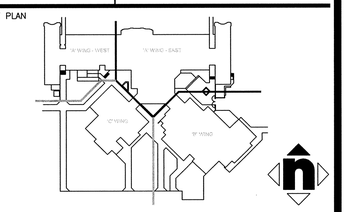

AGENCY APPROVAL

IDENTIFICATION STAMP
DIV. OF THE STATE ARCHITECT
04 - 106133
AC____ FLS____ SS____
DATE_____

PROJECT TITLE

SAN BERNARDINO CITY UNIFIED SCHOOL DISTRICT
777 NORTH "F" STREET
SAN BERNARDINO,CA. 92410

RAMONA-ALESSANDRO ELEMENTARY SCHOOL MODERNIZATION
670 RAMONA AVENUE
SAN BERNARDINO, CA 92411

© HMC GROUP 2003

NO.	REVISIONS	DATE	NO.	REVISIONS	DATE
1	DSA ADDENDUM NO. 1	2/10/10			

DRAWING TITLE

ENLARGED DEMOLITION & REMODEL FLOOR PLANS

ARCHITECT SEAL — LICENSED ARCHITECT — CHRISTOPHER BURNHAM AYLWARD — REG. NO. C-19759 — EXP. 02-24-10 — STATE OF CALIFORNIA

DESIGNED MRoth	PROJECT NO. 3137117
DRAWN MMinamide	SCALE AS NOTED
CHECKED QC	DRAWING NO. A4.2
DATE 19 MAR 2004	

PLEASE RECYCLE

" BID ISSUANCE SET"