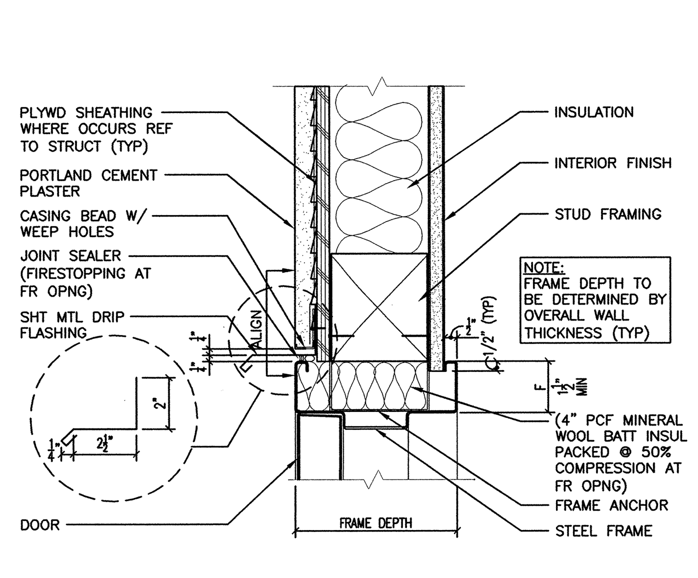

STL. FRAME DOOR HEAD **E2** N.T.S.

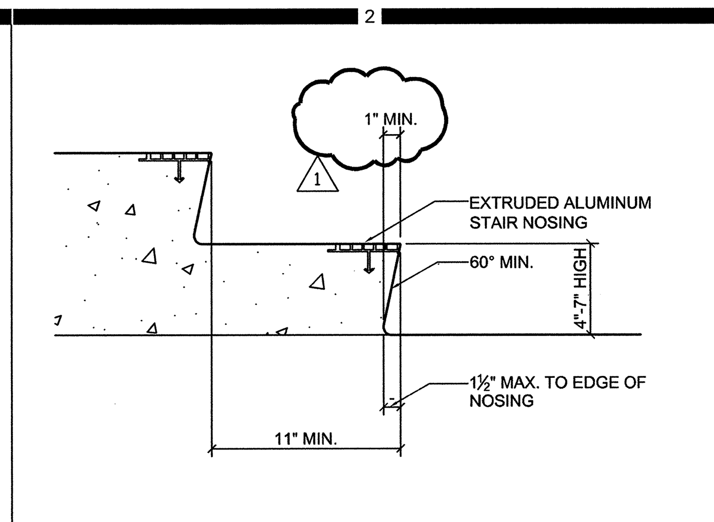

STAIR NOSING **E2** 1-1/2" = 1'-0"

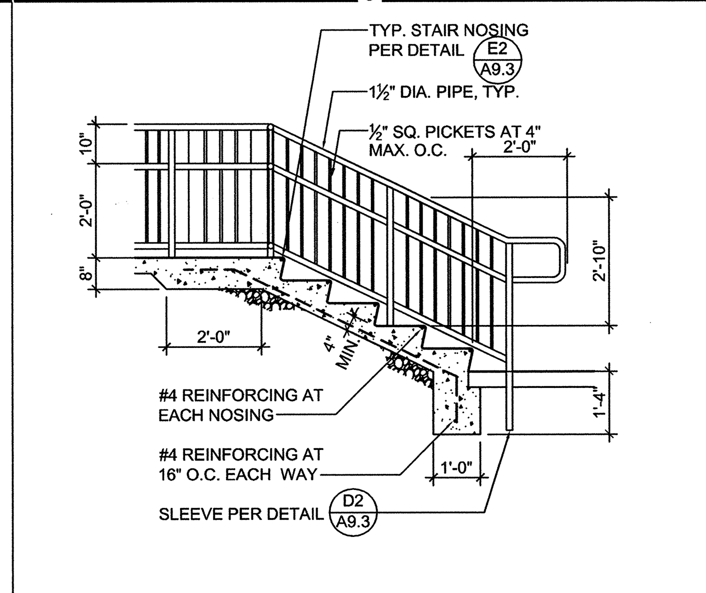

STAIR AT ENTRY **E3** 3/8" = 1'-0"

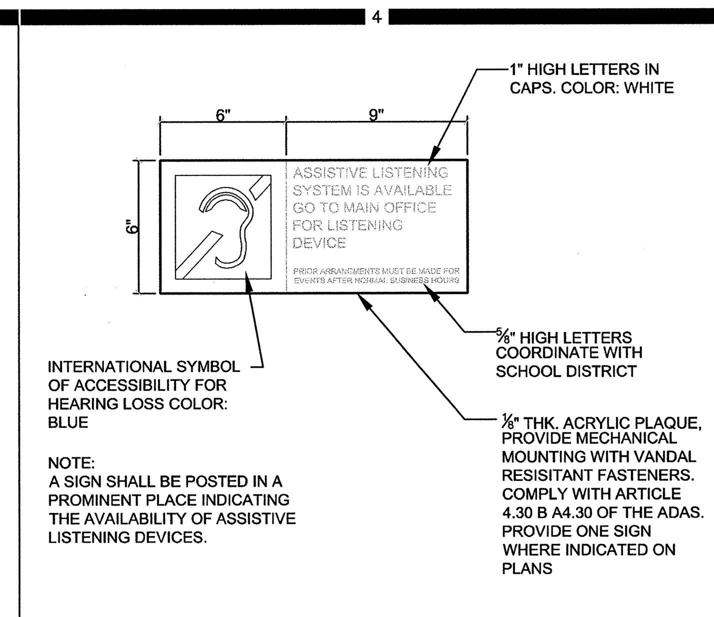

ASSISTIVE LISTENING DEVICE SIGN **E4** 1/4" = 1'-0"

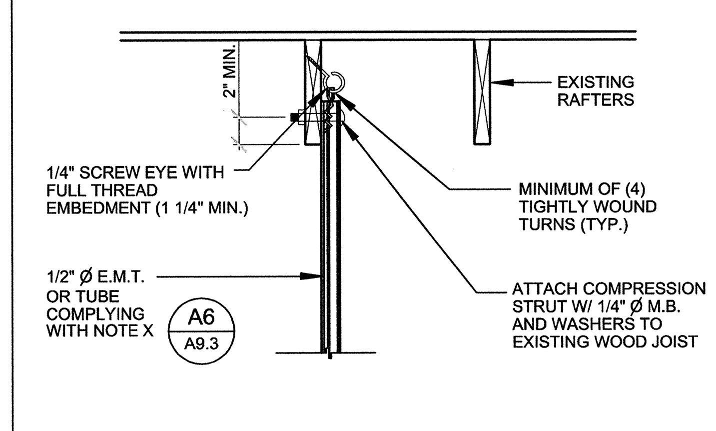

COMPRESSION STRUT **E5** HALF

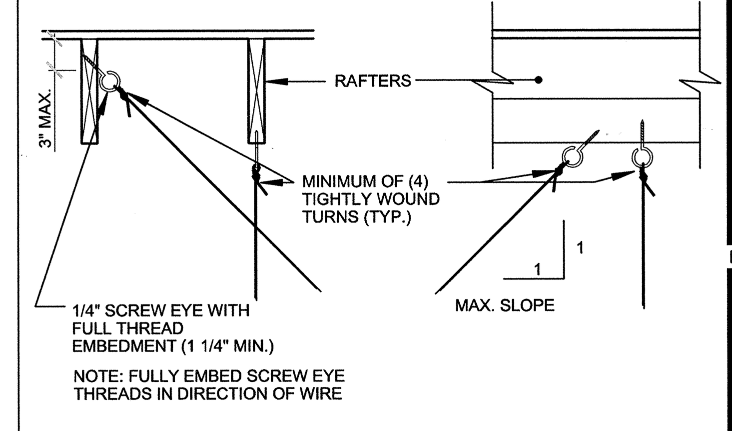

HANGER WIRE FASTENING **E6** HALF

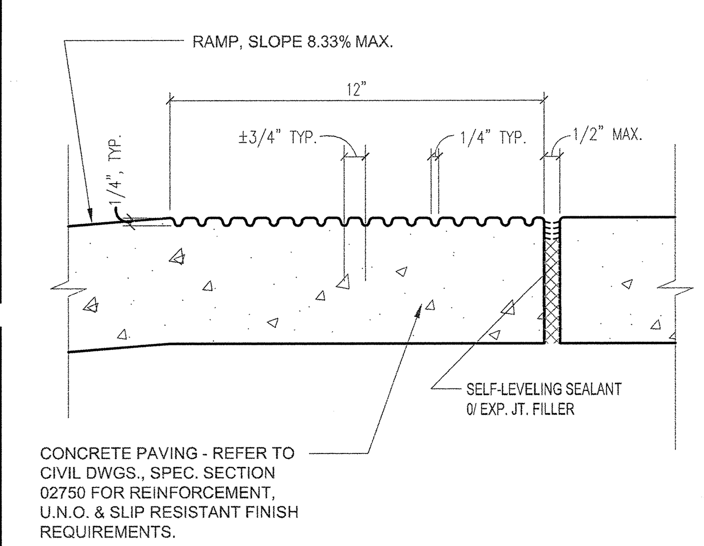

CONCRETE GROOVING DETAIL **D1** 3" = 1'-0"

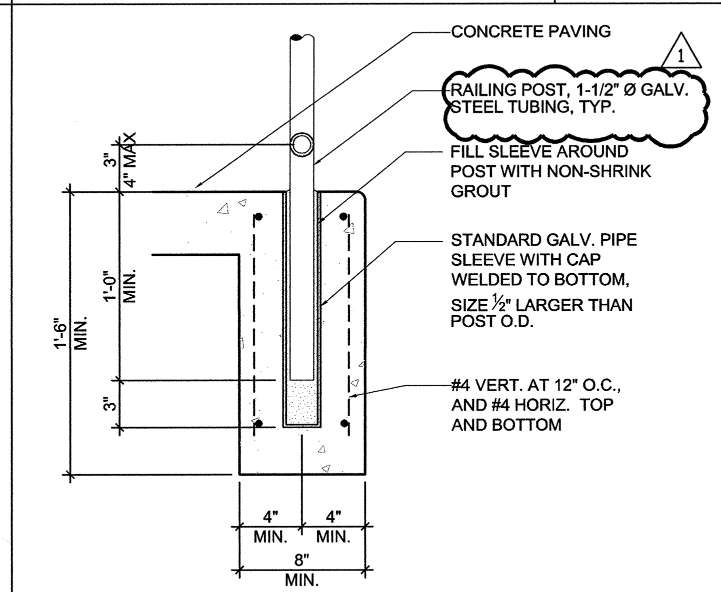

HANDRAIL SLEEVE **D2** 1-1/2" = 1'-0"

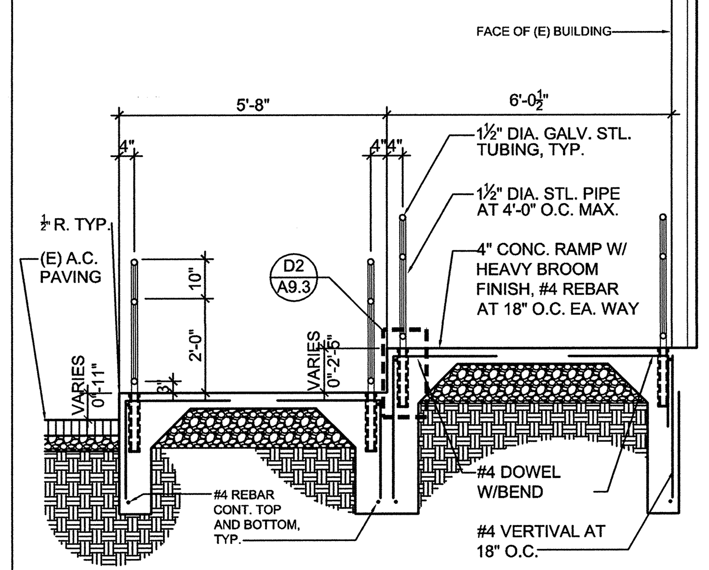

SECTION AT ENTRY RAMP **D3** 3/8" = 1'-0"

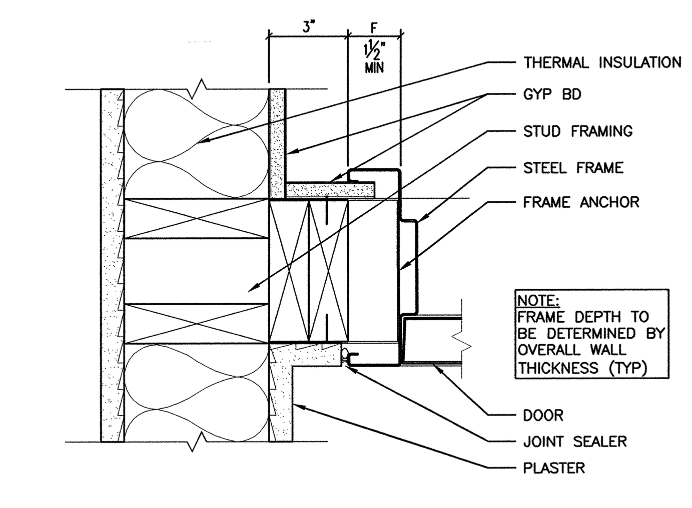

NOT USED **D4** N.T.S.

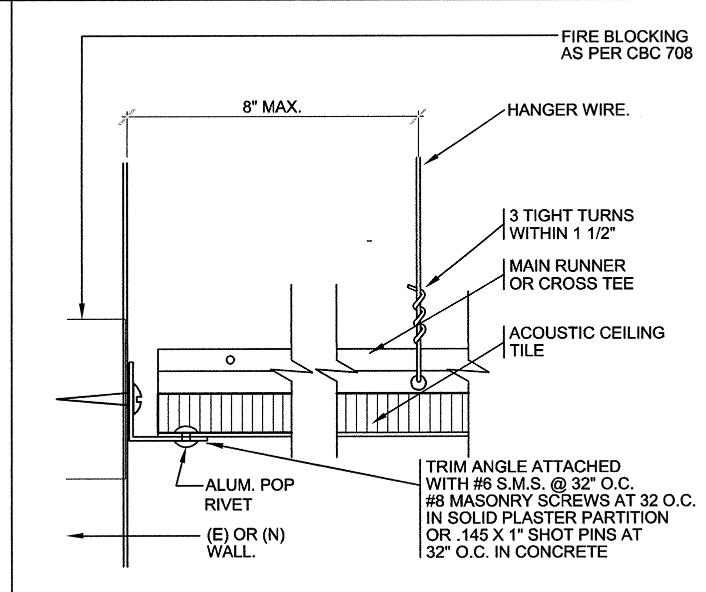

SUSPENDED CEILING FIXED EDGE **D5** HALF

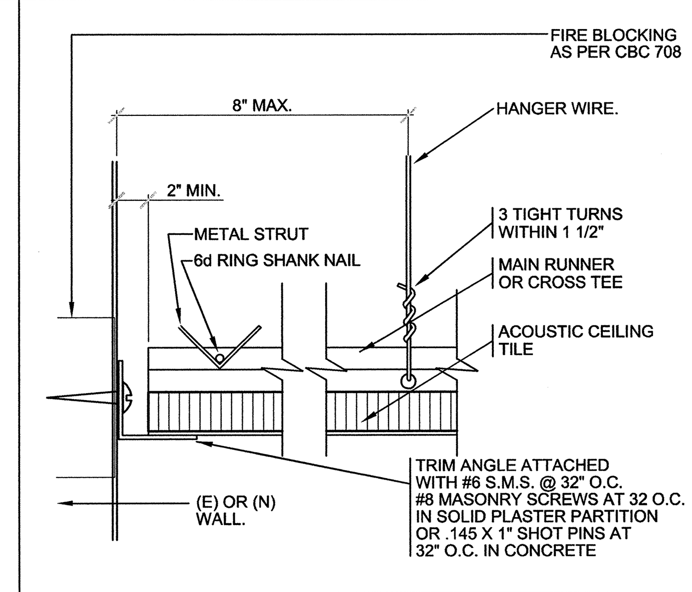

SUSPENDED CEILING SLIP EDGE **D6** HALF

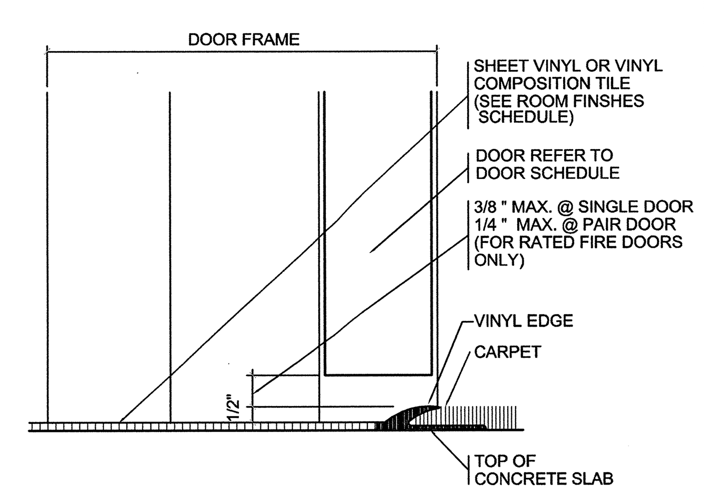

DOOR SILL-CARPET TO VCT **C1** 3" = 1'-0"

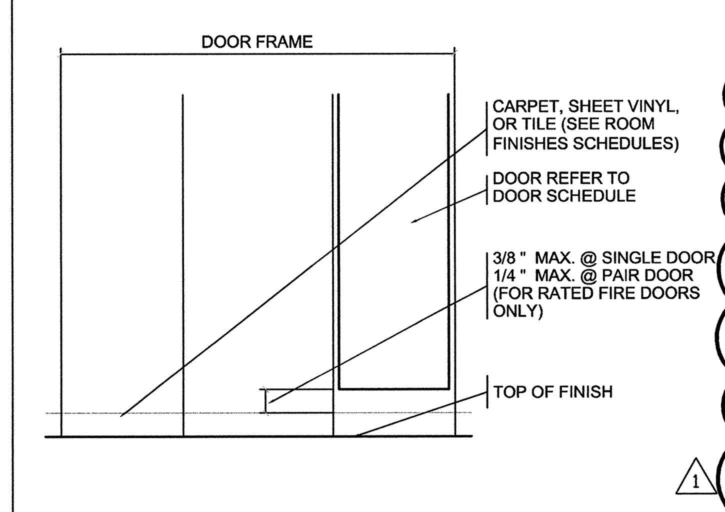

DOOR SILL-SAME MATERIALS **C2** 3" = 1'-0"

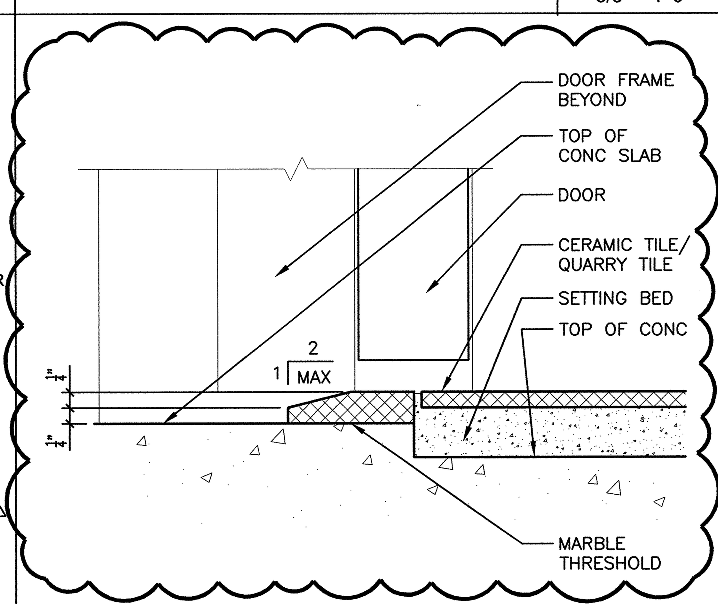

DOOR SILL-VCT TO CERAMIC TILE **C3** 3" = 1'-0"

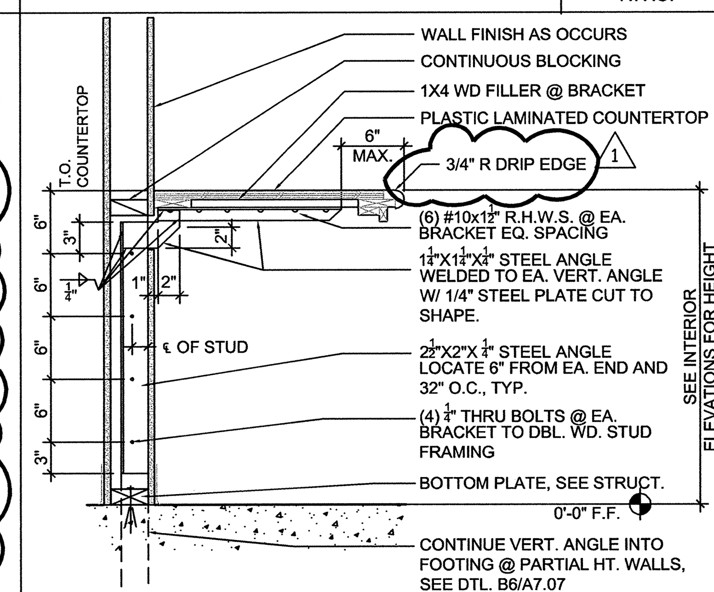

COUNTERTOP **C4** 1/4" = 1'-0"

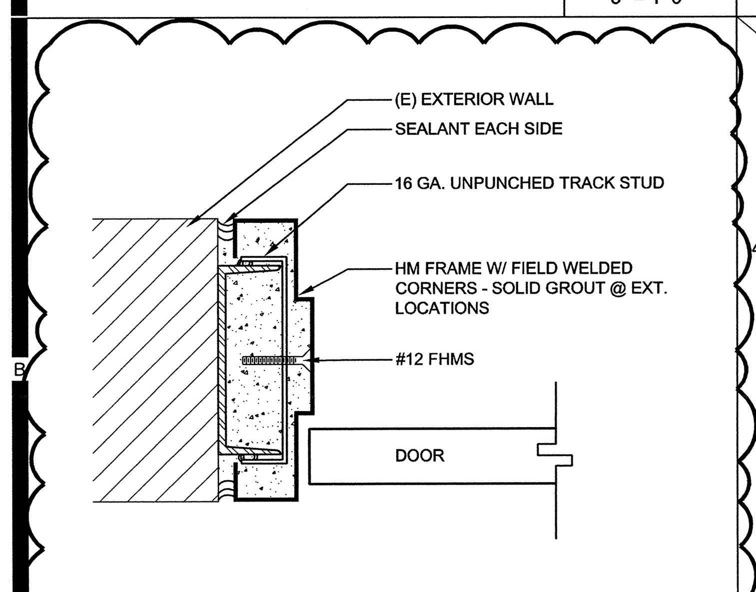

EXTERIOR H.M. HEAD/JAMB **B1** 3" = 1'-0"

NOT USED

NOT USED **B2** 3" = 1'-0"

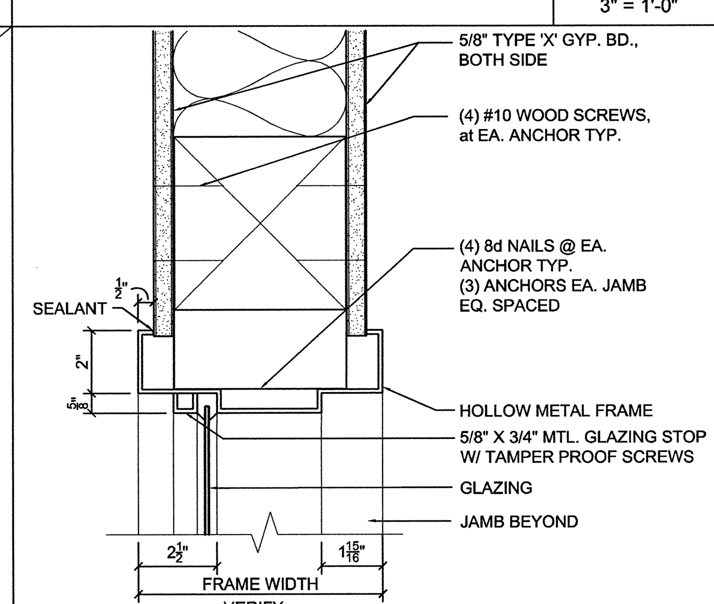

INTERIOR H.M. WINDOW-HEAD/JAMB SIM. **B3** 3" = 1'-0"

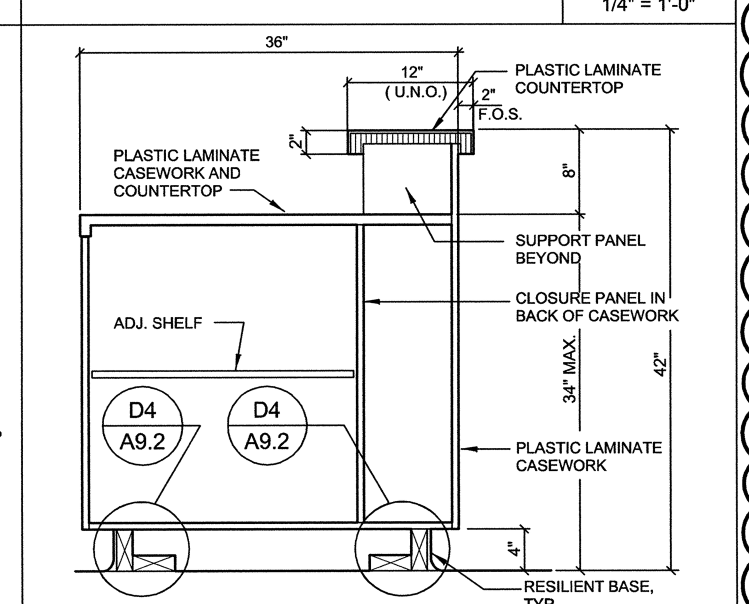

SECTION AT CASEWORK **B4** 1" = 1'-0"

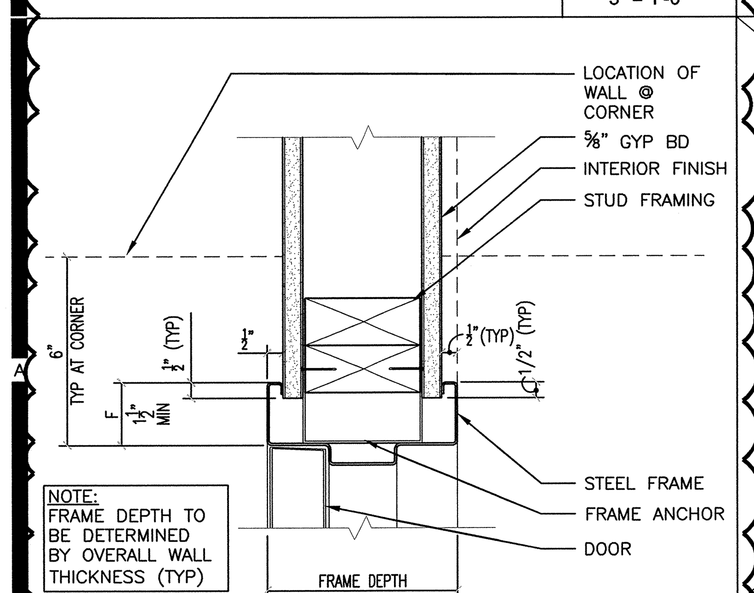

INTERIOR JAMB/ HEAD DETAIL **A1** 3" = 1'-0"

NOT USED

NOT USED **A2** 3" = 1'-0"

NOT USED

NOT USED **A3** --

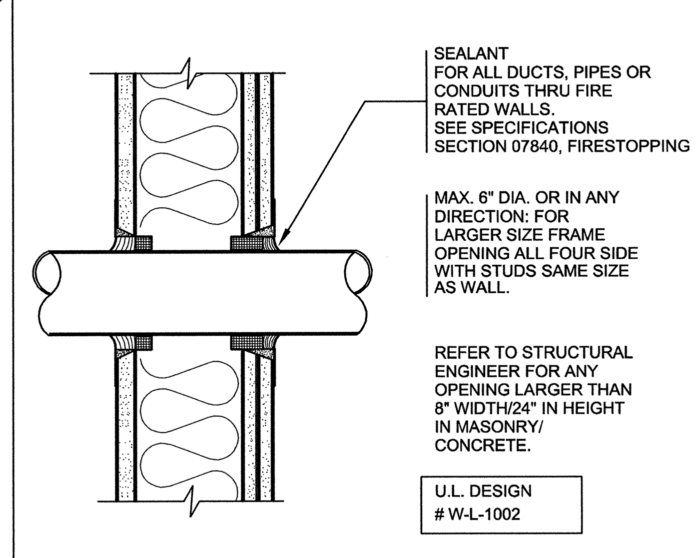

PIPE PENETRATION DETAIL (STUD WALL) **A4** HALF

1. EXITWAYS: SURROUND EACH PANEL WITH A MAIN RUNNER, CROSS RUNNER OR LEDGER ANGLE.
2. COMPONENTS: SYSTEM SHALL SUPPORT NO OTHER COMPONENTS EXCEPT GRILLES.
3. HANGER WIRES: MINIMUM 12 GAGE, MAXIMUM 16 SF. NO SPLICES PERMITTED.
4. PERIMETERS: HANGER WIRE WITHIN 8 INCHES OF SUPPORT OR WITHIN 1/4 OF LENGTH OF END TEE, WHICHEVER IS LESS.
5. PROVIDE SUPPLEMENTARY SUPPORT AT OBSTRUCTIONS AND SUPPORT AT CEILING BREAKS OR SOFFIT. COUNTER SLOPE WIRES THAT ARE MORE THAN 1 IN 6 OUT OF PLUMB.
6. ATTACH SYSTEM TO NOT MORE THAN 2 ADJACENT WALLS; LEAVE 2 INCH FREE OF OTHER WALLS. WHERE WALLS ARE DIAGONAL, ONE END OF MAIN AND CROSS RUNNERS SHALL BE FREE AND 2 INCH CLEAR OF WALL.
7. PROVIDE STRUTS OR 16 GAGE WIRE TO CONNECT FREE END OF CROSS RUNNERS MORE THAN 12 INCHES FROM WALL.
8. SPLAYED BRACING: SETS OF FOUR, 12 GAGE MINIMUM, MAXIMUM SPACING OF 12 X 12 FEET. PROVIDE VERTICAL COMPRESSION STRUT AT EACH SET OF BRACING WIRES.
9. DISTANCE OF SPLAYED BRACING FROM WALL: MAXIMUM 6 FEET.
10. SLOPE OF BRACING WIRES: 45 DEGREES FROM PLANE OF CEILING. MAINTAIN WIRES TIGHT; NO SPLICES PERMITTED.
11. THREE TIGHT TURNS REQUIRED AT HANGER WIRE; 4 TIGHT TURNS AT BRACING WIRES, ALL WITHIN 1-1/2 INCHES. ALIGN WIRES IN DIRECTION OF PULL.
12. SEPARATE WIRES 6 INCHES FROM UNBRACED DUCTS, PIPES OR CONDUIT. CONDUIT 3/4 INCH DIAMETER OR LESS MAY BE ATTACHED TO WIRES USING APPROVED CONNECTORS.
13. LIGHT FIXTURES: ATTACH TO CEILING SYSTEM TO RESIST HORIZONTAL FORCE EQUAL TO WEIGHT OF FIXTURE.
14. FIXTURES AND AIR TERMINALS SHALL BE SUPPORTED INDEPENDENTLY WITH FOUR TAUT 12 GAGE WIRES. WIRES TO BE CAPABLE OF SUPPORTING 4 TIMES WEIGHT OF UNIT.
15. SURFACE MOUNTED FIXTURES: SUPPORT WITH MINIMUM TWO POSITIVE DEVICES WHICH SURROUND RUNNER; SUPPORT RUNNER WITH 12 GAGE HANGER WIRE. SPRING CLIPS OR CLAMPS NOT SUPPORTED BY HANGER WIRE NOT PERMITTED.
16. PENDANT MOUNTED FIXTURES: SUPPORT DIRECTLY FROM STRUCTURE WITH HANGER WIRE OR CABLE PASSING THROUGH EACH PENDANT HANGER, CAPABLE OF SUPPORTING 4 TIMES WEIGHT OF FIXTURE.
17. NON-BEARING PARTITIONS TERMINATING AT CEILING SUPPORTED DIAGONALLY WITH 2" x 4" BRACING AT MAXIMUM 8 FEET O.C. SHALL NOT BE CONSIDERED AS ADDING TO LATERAL LOAD OF CEILING.
18. DO NOT ECCENTRICALLY LOAD SYSTEM.
19. SUSPENSION SYSTEM: HEAVY DUTY.

MATERIALS: PER SPECIFICATIONS

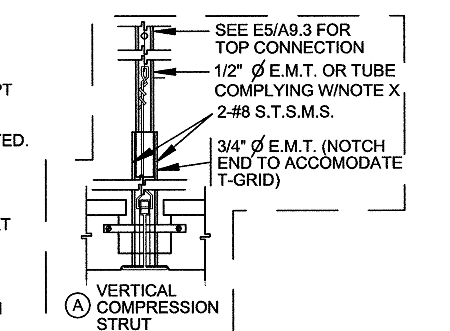

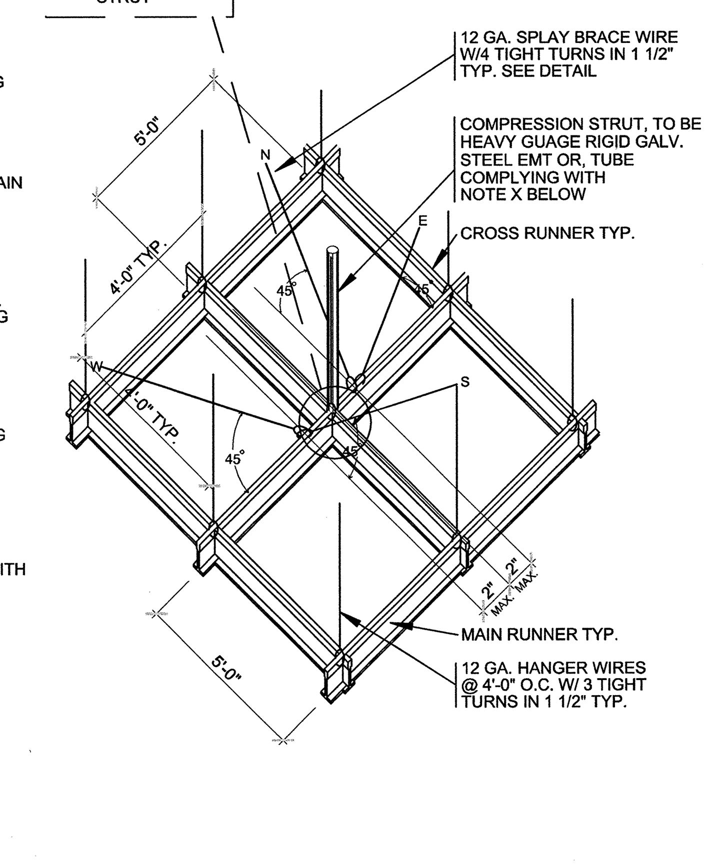

COMPRESSION STRUT SCHEDULE			
		PIPE SIZE	PIPE LENGTH
	OD	ID	L MAX.
1/2"	.840	.622	52"
3/4"	1.050	.824	66"
1"	1.315	1.049	84"
1 1/4"	1.660	1.380	107"
1 1/2"	1.900	1.610	124"

L/R 200   R=(OD' + ID')^½   L= 200 (OD' + ID')^½

NOTE: X

COMPRESSION STRUTS: STEEL SECTION WITH L/R RATIO OF 200 MAX. STARTING NOT MORE THAN 4'-0" FROM ADJACENT WALLS TO SUPPORT A TRIBUTARY AREA OF 144 S.F. ATTACH TO MAIN RUNNER WITH (2) #12 SDST MACHINE BOLT AND TO STRUCTURE PER DETAIL E5/A9.2 COMPRESSION STRUT SHALL NOT REPLACE HANGER WIRE. REFERENCE IR M-3 FOR DETAILS.

SUSPENDED CEILING GRID **A6** N.T.S.

HMC ARCHITECTS
Architecture Interiors Planning
3546 CONCOURS STREET
ONTARIO, CALIFORNIA 91764
Telephone: 909 . 989 . 9979
Fax: 909 . 483 . 1400
www. hmcarchitects .com

NO. DESCRIPTION DETAIL

CONSULTANT SEAL | CONSULTANT

KEY PLAN

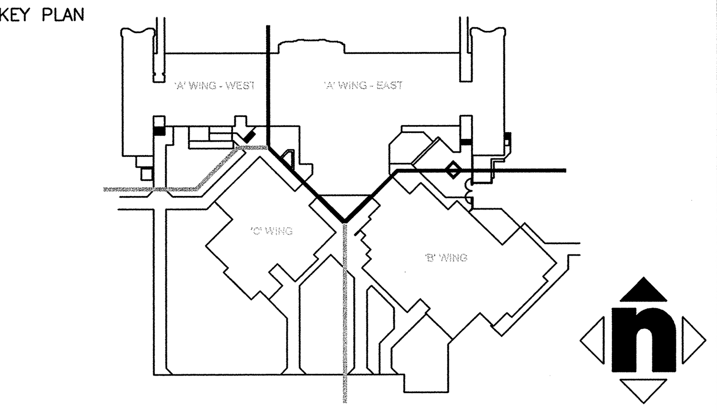

AGENCY APPROVAL

IDENTIFCATION STAMP DIV. OF THE STATE ARCHITECT
04 - 106133
AC____ FLS____ SS____
DATE____

PROJECT TITLE

SAN BERNARDINO CITY UNIFIED SCHOOL DISTRICT
777 NORTH "F" STREET
SAN BERNARDINO,CA. 92410

RAMONA-ALESSANDRO ELEMENTARY SCHOOL MODERNIZATION
670 RAMONA AVENUE
SAN BERNARDINO, CA 92411

© HMC GROUP 2003

NO.	REVISIONS	DATE	NO.	REVISIONS	DATE
1	DSA ADDENDUM NO. 1	2/10/10			

DRAWING TITLE

DETAILS

ARCHITECT SEAL

LICENSED ARCHITECT
CHRISTOPHER RICHARD TAYLOR
NO. C-19759
REN. 02-24-11
STATE OF CALIFORNIA

DESIGNED MRath	PROJECT NO. 3137117
DRAWN MMinamide	SCALE AS NOTED
CHECKED QC	DRAWING NO.
DATE 19 MAR 2004	A9.3

G:\DGN\3137\117\from sac\A9.3.dwg

Feb 10, 2010 - 3:5

PLEASE RECYCLE

" BID ISSUANCE SET"