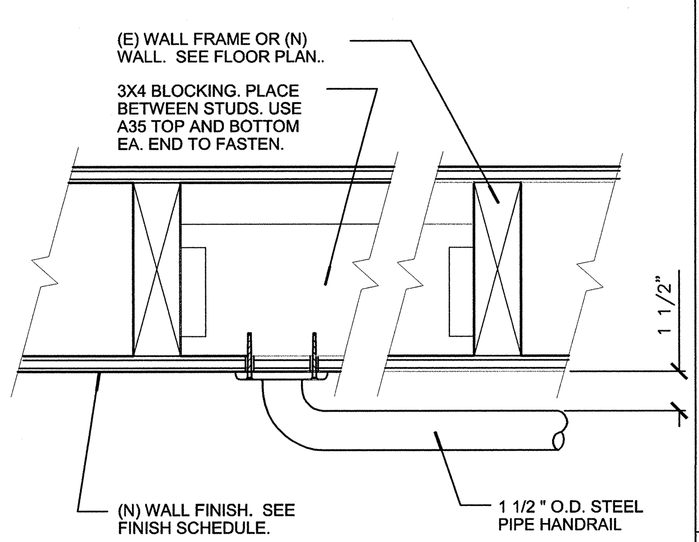

RAILING END - PLAN VIEW
N.T.S.

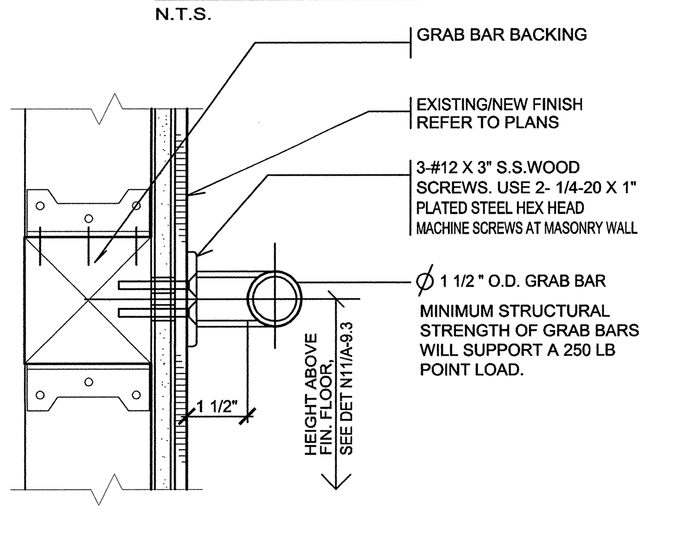

SECTION
N.T.S.

GRAB BAR MOUNTING — D1
3" = 1'-0"

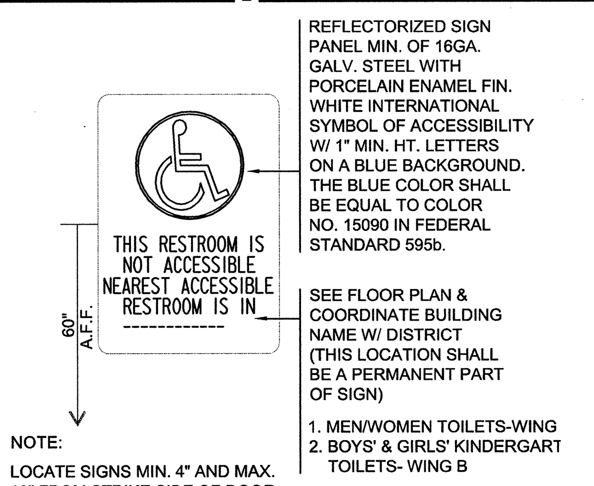

NOTE:
LOCATE SIGNS MIN. 4" AND MAX. 12" FROM STRIKE SIDE OF DOOR. WHERE THERE IS NO WALL SPACE ON THE STRIKE SIDE, SIGNS SHALL BE PLACED ON THE NEAREST ADJ. WALL, PREFERABLY ON THE RIGHT.

DIRECTIONAL SIGNAGE — E2
N.T.S.

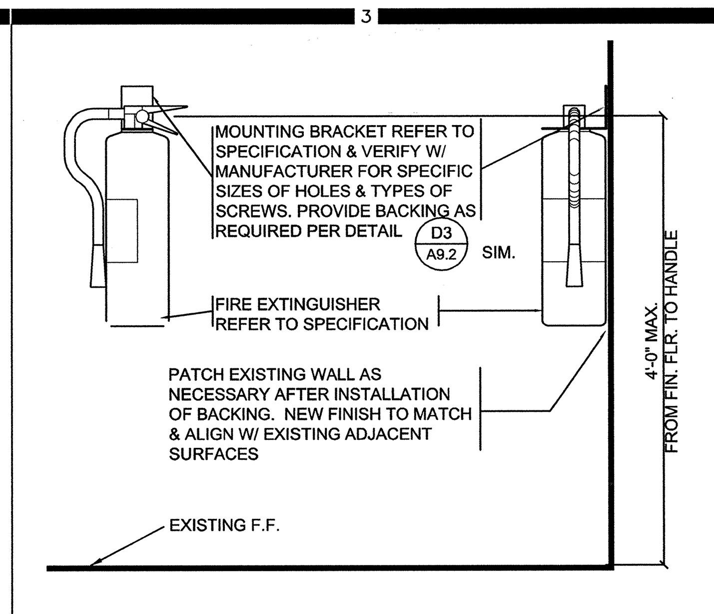

WALL MOUNTED FIRE EXTINGUSHER — E3
1 1/2" = 1'-0"

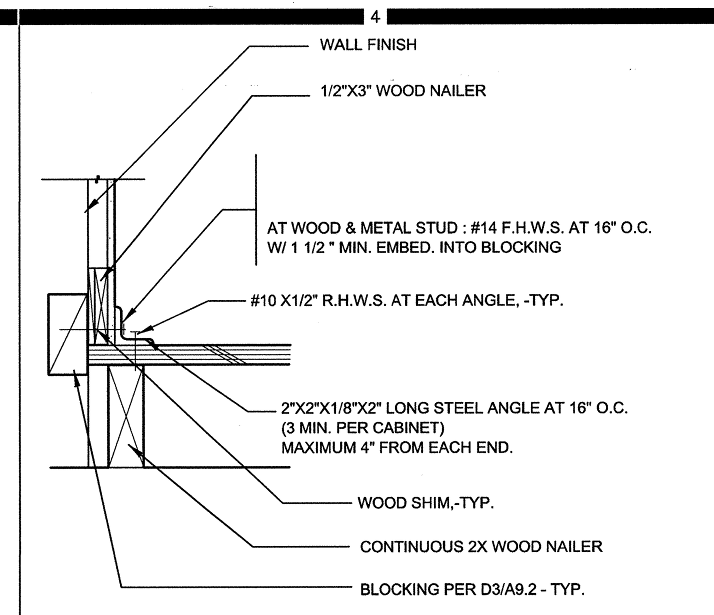

BASE CABINET/TALL CABINET ANCHORAGE — E4
3" = 1'-0"

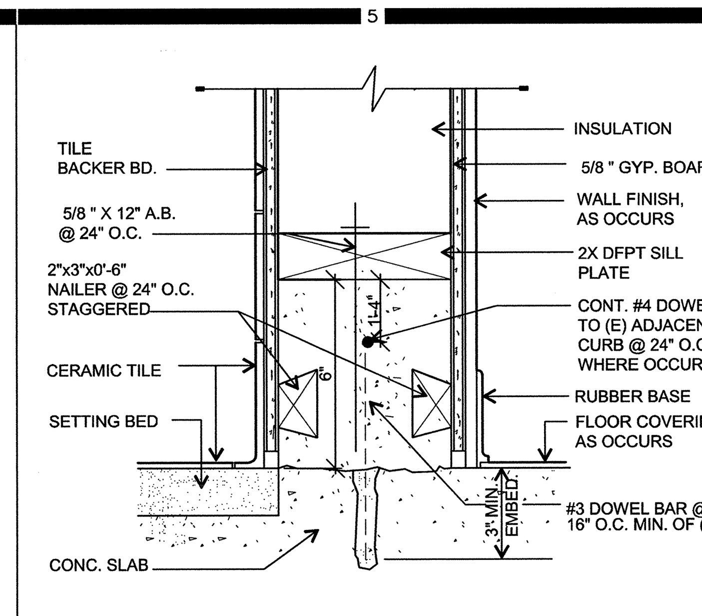

CURB AT RESTROOM WALL — E5
3" = 1'-0"

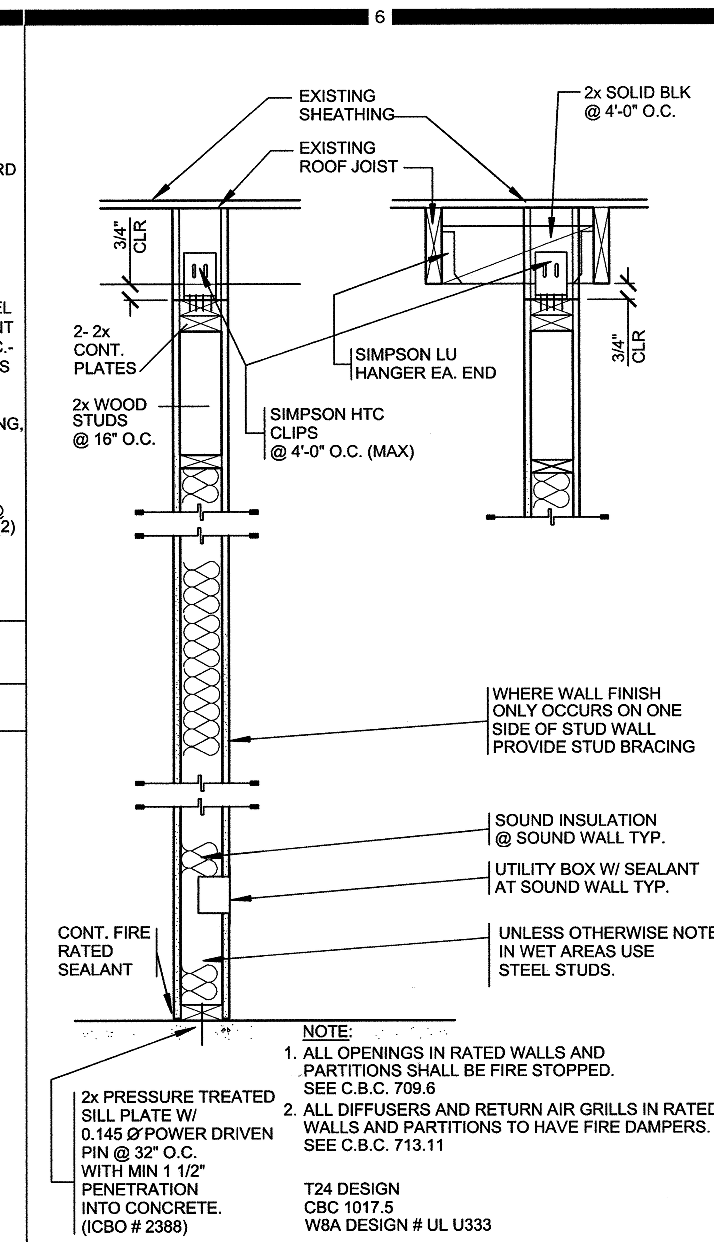

NOTE:
1. ALL OPENINGS IN RATED WALLS AND PARTITIONS SHALL BE FIRE STOPPED. SEE C.B.C. 709.6
2. ALL DIFFUSERS AND RETURN AIR GRILLS IN RATED WALLS AND PARTITIONS TO HAVE FIRE DAMPERS. SEE C.B.C. 713.11

T24 DESIGN
CBC 1017.5
W8A DESIGN # UL U333

INTERIOR WALL — D6
N.T.S.

FIXTURES	A	E	K
TOILET CENTERLINE FROM WALL	18"	15"	12"
TOILET SEAT HEIGHT (TOP OF SEAT)	17"-19"	15"	10"-12"
GRAB BAR HEIGHT (SIDE)	33"	27"	20"-22"
TOILET PAPER IN FRONT OF TOILET	12" MAX.	6" MAX.	6" MAX.
NAPKIN DISPOSAL IN FRONT OF TOILET	12" MAX.	12" MAX.	N/A
DISPENSER OR MIRROR HEIGHT	40" MAX.	36" MAX.	32" MAX.
LAVATORY/SINK TOP HEIGHT	34" MAX.	29" MAX.	24" MAX.
LAVATORY/SINK KNEE CLEARANCE	27" MIN.	24" MIN.	19" MIN.
URINAL LIP HEIGHT	17" MAX.	15" MIN.	13" MAX.
URINAL FLUSH HANDLE HEIGHT	44 MAX.	37 MAX.	32" MAX.
DRINKING FOUNTAIN BUBBLER HEIGHT	36" MAX.	32" MAX.	30" MAX.
DRINKING FOUNTAIN KNEE CLEARANCE	27" MIN.	24" MIN.	22" MIN.
RAMP/STAIR HANDRAIL HEIGHT	34"-38"	27"	22"

A = ADULT DIMENSIONS (AGE 12 AND OVER)
E = ELEMENTARY DIMENSIONS
K = KINDERGARTEN AND PRE-SCHOOL DIMENSIONS

DIMENSIONS FOR ACCESSIBLITY IN TOILET FACILITIES — D2
N.T.S.

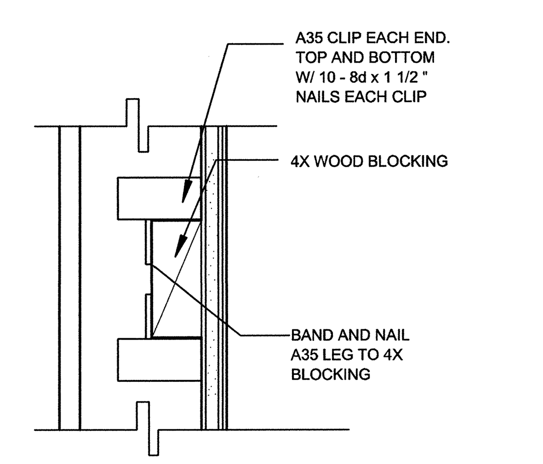

WOOD FRAMED BLOCKING — D3
3" = 1'-0"

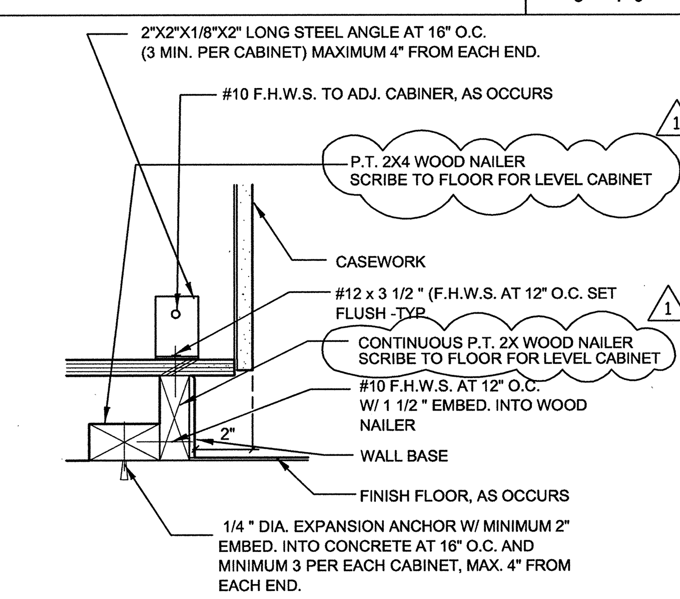

BASE CABINET/TALL CABINET ANCHORAGE — D4
3" = 1'-0"

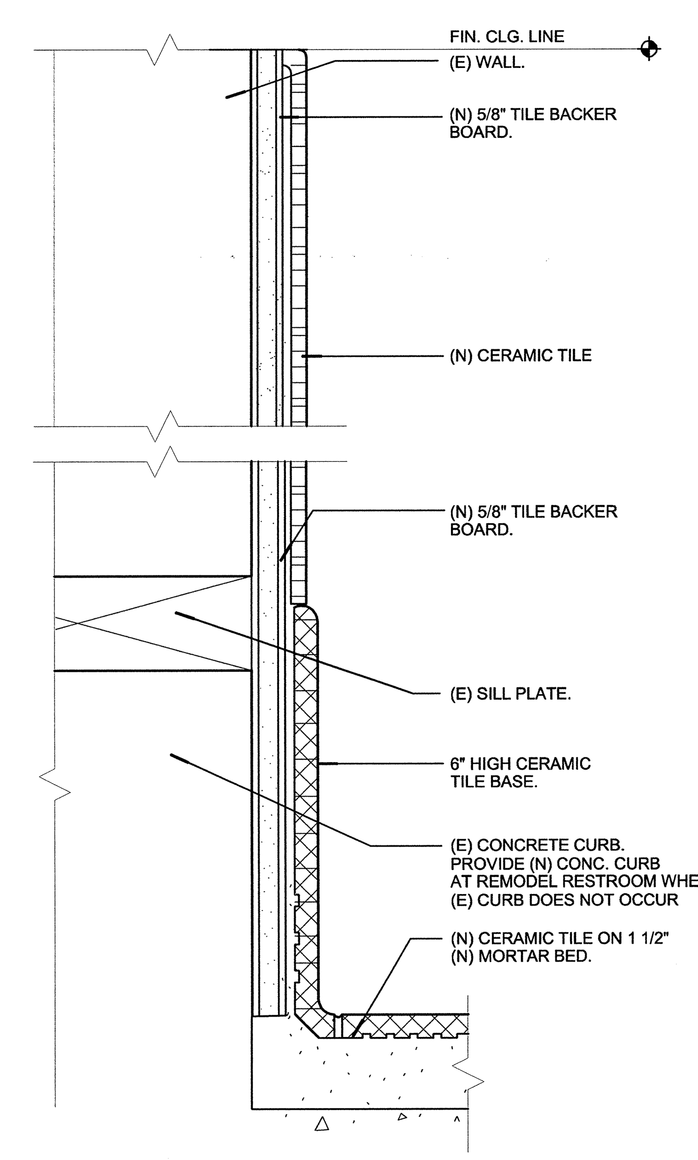

TILE WAINSCOT — C5
HALF

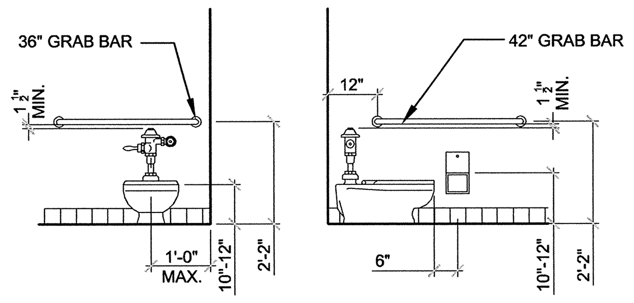

NOTE:
1. SEE SPECIFICATIONS FOR MANUFACTURER.
2. VERIFY ALL ACCESSORIES SIZE AND DIMENSIONS WITH APPROVED MANUFACTURER'S SHOP DRAWINGS.
3. ALL BACKING FOR ACCESSORIES SHALL BE AS REQUIRED BY MANUFACTURER AS DETAILED.
4. FOR MOUNTING HEIGHTS REFER TO DTL D2/A9.2

KINDERGATEN TOILET — C1
3/8" = 1'-0"

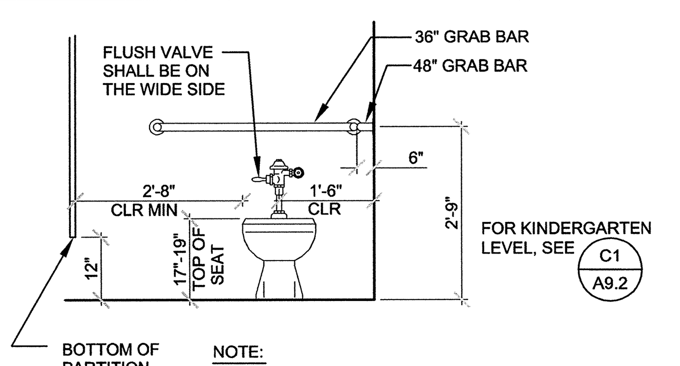

NOTE:
1. SEE SPECIFICATIONS FOR MANUFACTURER.
2. VERIFY ALL ACCESSORIES SIZE AND DIMENSIONS WITH APPROVED MANUFACTURER'S SHOP DRAWINGS.
3. ALL BACKING FOR ACCESSORIES SHALL BE AS REQUIRED BY MANUFACTURER AS DETAILED.
3. FOR MOUNTING INFORMATION REFER TO DTL D2/A9.2

TYP. TOILET END ELEVATION — C2
1/2" = 1'-0"

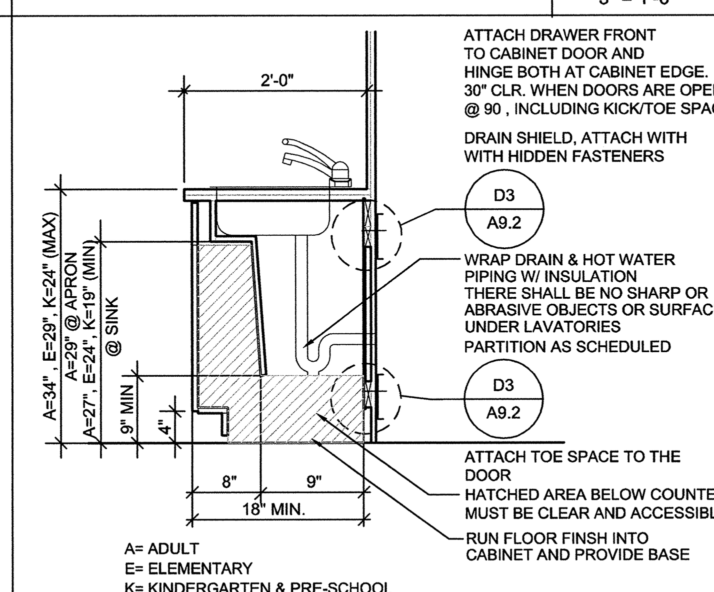

ACCESSIBLE CABINET AND SINK — C3
3" = 1'-0"

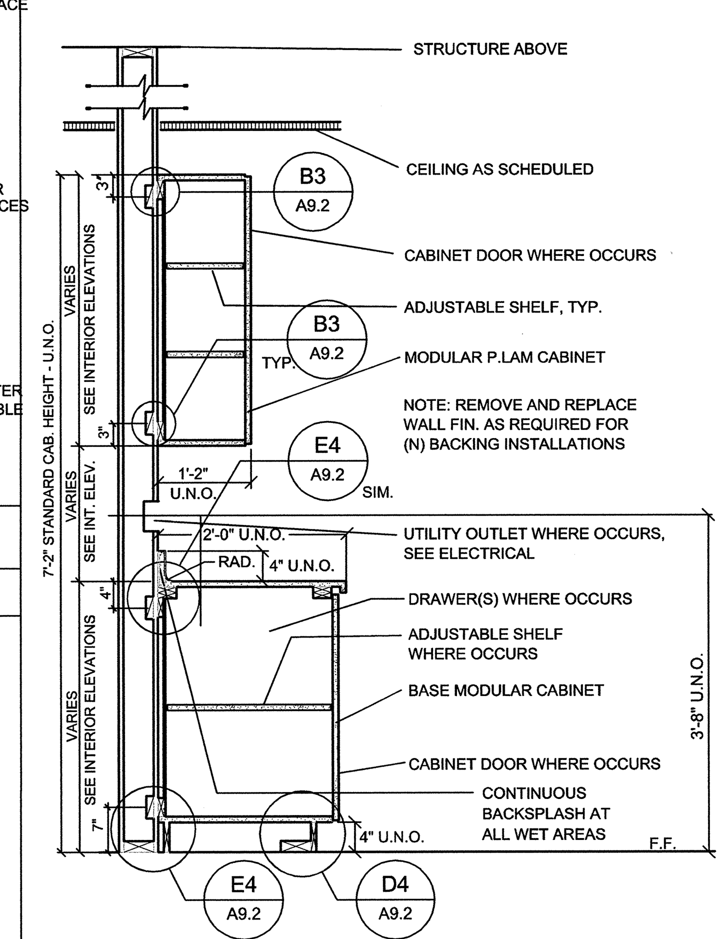

NOTES:
1. EACH UPPER MODULE SHALL BE ATTACHED TO THE ADJACENT UNIT WITH A MINIMUM OF 3 EA. #10X1-¼" COUNTER SUNK WOOD SCREWS AT TOP, CENTER AND BOTTOM.
2. SEE INTERIOR ELEVATIONS FOR SPECIFIC BASE MODULAR CABINET ELEMENTS (SHELVES, DRAWERS, CABINET DOORS, ETC.)
3. PROVIDE LOCKS AT UPPER AND LOWER CABINETS, SEE HARDWARE SCHEDULE

BASE CABINET (WITH UPPER WHERE OCCURS) — B4
3/4" = 1'-0"

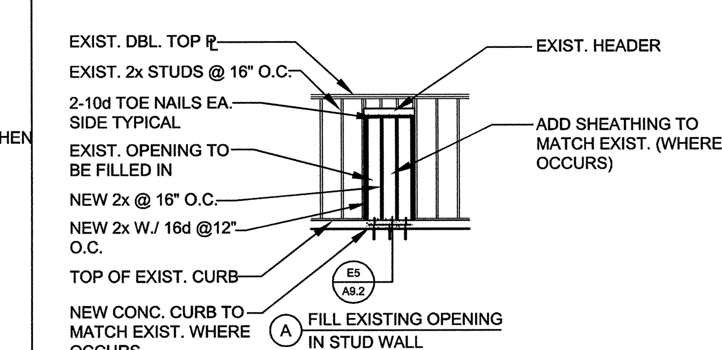

(A) FILL EXISTING OPENING IN STUD WALL

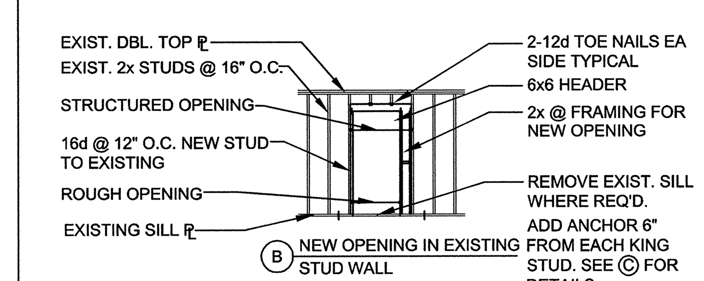

(B) NEW OPENING IN EXISTING STUD WALL

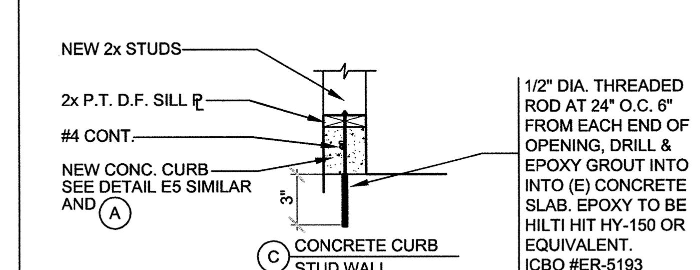

(C) CONCRETE CURB STUD WALL

NOTES:
1. USE 6" DEEP x STUD WIDTH HEADER U.N.O.
2. SHORE EXISTING FRAMING BEFORE REMOVING STUDS. SHORING TO REMAIN IN PLACE UNTIL SHIMS & NEW STUDS ARE IN PLACE.
3. REMOVE EXISTING STUDS, PLASTER, & STUCCO AS REQ'D. DO NOT CUT EXISTING PLATES, DRAG TIES, OR HEADERS. NOTIFY STRUCTURAL ENGINEER OF NON-TYPICAL CONDITIONS AFER EXPOSING STRUCTURE.

TYPICAL STUD WALL DETAILS — A6
N.T.S.

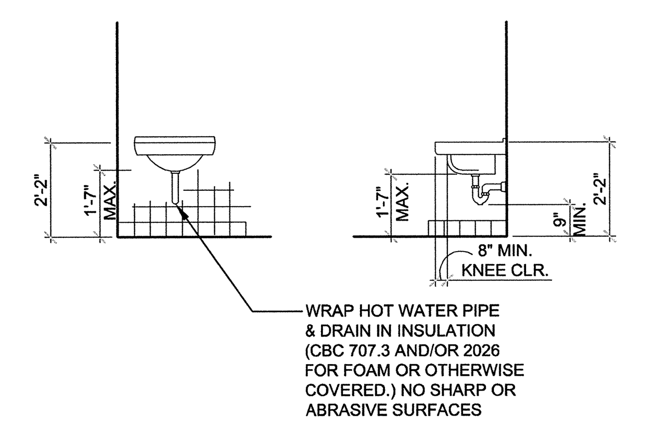

NOTE:
REFER TO D2/A9.2 FOR ALL MOUNTING HEIGHT REQUIRMENTS.

KINDERGARTEN SINK — B1
3/8" = 1'-0"

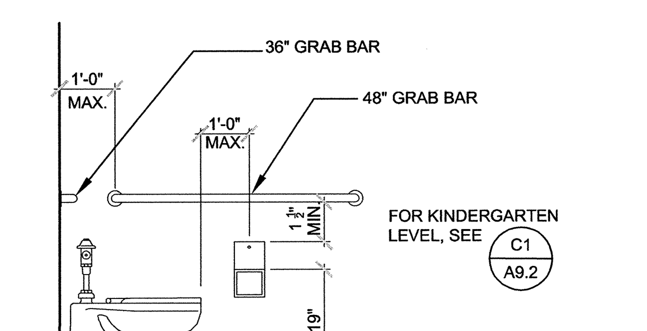

TYP. TOILET SIDE ELEVATION — B2
1/2" = 1'-0"

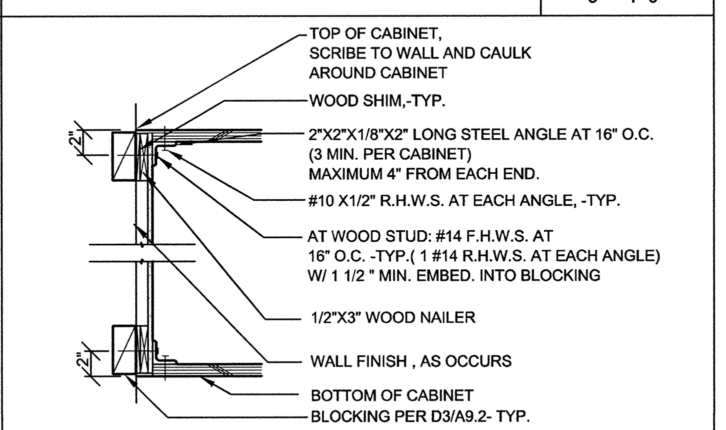

WALL HUNG CABINET ANCHORAGE — B3
1" = 1'-0"

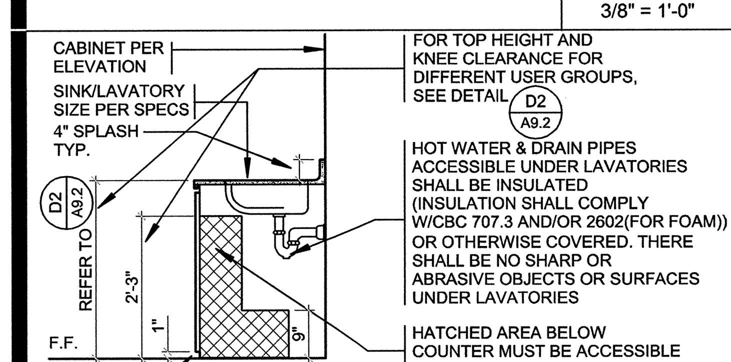

FAUCET CONTROLS & OPERATING MECHANISMS SHALL BE OPERABLE WITH ONE HAND AND SHALL NOT REQUIRE TIGHT GRASPING, PINCHING OR TWISTING OF THE WRIST. THE FORCE REQUIRED TO ACTIVATE CONTROLS SHALL BE NO MORE THAN 5 LBS. LEVER OPERATED, PUSH TYPE & ELECTRONICALLY CONTROLLED MECHANISMS ARE ACCEPTABLE. SELF CLOSING VALVES ARE ALLOWED IF THE FAUCET REMAINS OPEN FOR AT LEAST 10 SECONDS.

NOTE: RE-MOUNT ALL (E) TOILET ACCESSORIES PER ADA REQUIRED HEIGHTS REF. D2/A9.2

ACCESSIBLE BASE CABINET WITH SINK — A1
1/2" = 1'-0"

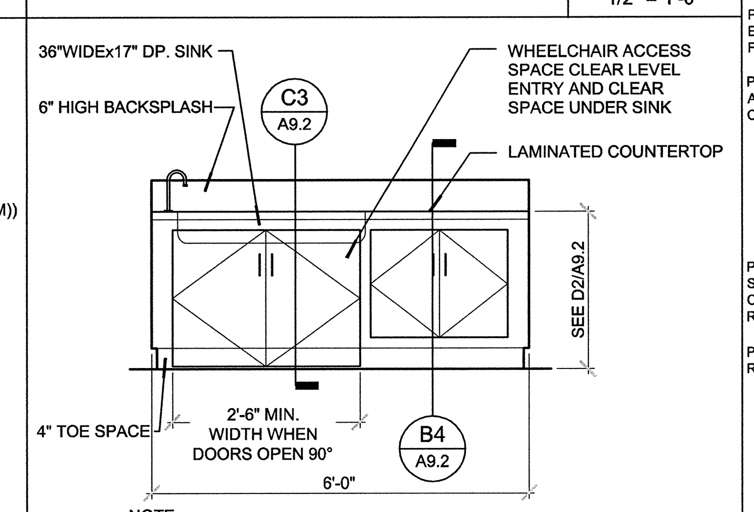

NOTE:
DIMENSION REFLECTS ADA STANDARD FOR ADULTS, FOR ELEMENTARY AND KINDERGARTEM DIMENSIONS, REFER TO DETAIL D2/A9.2

6" DEEP SINK UNIT — A2
1/2" = 1'-0"

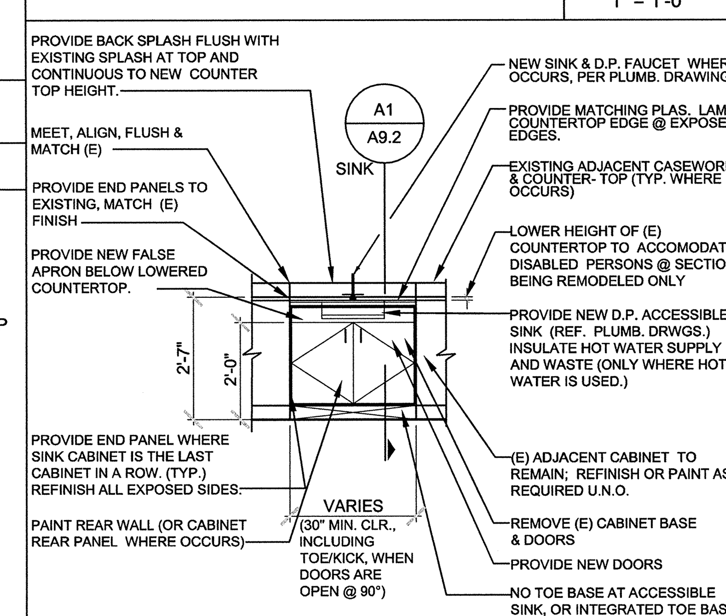

NOTE:
1. WHERE (E) ADJACENT WALL OR CABINET FINISH IS DAMAGED OR REMOVED, CONTRACTOR SHALL REPAIR & REFINISH TO MATCH ORIGINAL CONDITION.
2. CONTRACTOR TO FIELD VERIFY SIZE OF EACH CABINET THAT IS BEING MODIFIED
3. PROVIDE NEW PULLS AT ALL ACCESSIBLE CASEWORK OR EQUALLY ACCESSIBLE PULL HARDWARE, TYP. TO MATCH EXISTING
4. PROVIDE NEW COUNTERTOP FOR ENTIRE LENGTH OF CASEWORK (NOT JUST SINK PORTION).

TYPICAL MODIFIED CABINET DETAIL — A3
N.T.S.

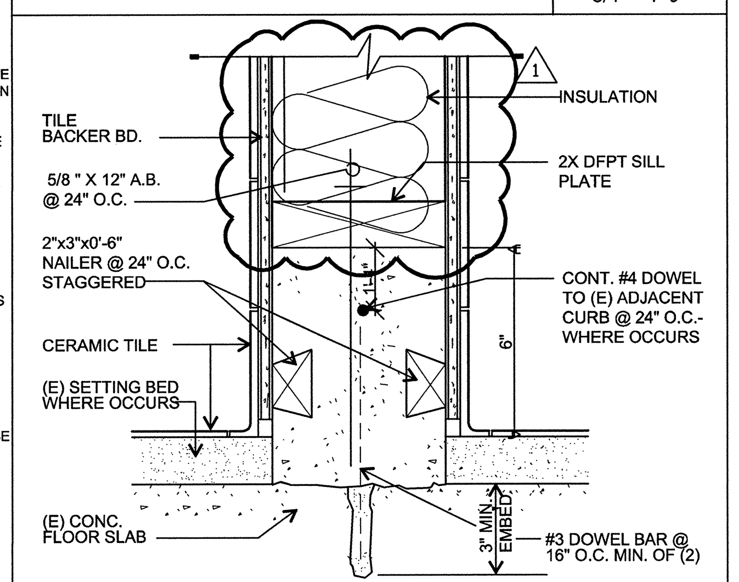

CURB AT RESTROOM WALL — A4
3" = 1'-0"

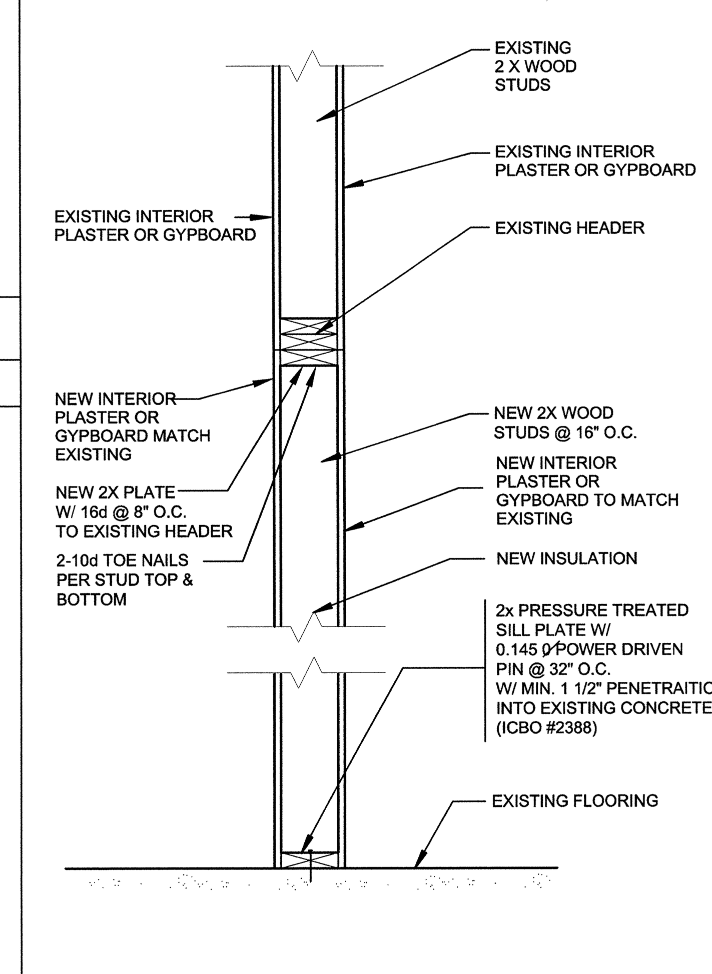

DOOR IN-FILL DETAIL INTERIOR WALL — A5
N.T.S.

HMC ARCHITECTS
3546 CONCOURS STREET
ONTARIO, CALIFORNIA 91764
Telephone: 909 . 989 . 9979
Fax: 909 . 483 . 1400
www. hmcarchitects .com
Architecture Interiors Planning

NO. DESCRIPTION DETAIL

CONSULTANT SEAL | CONSULTANT

KEY PLAN

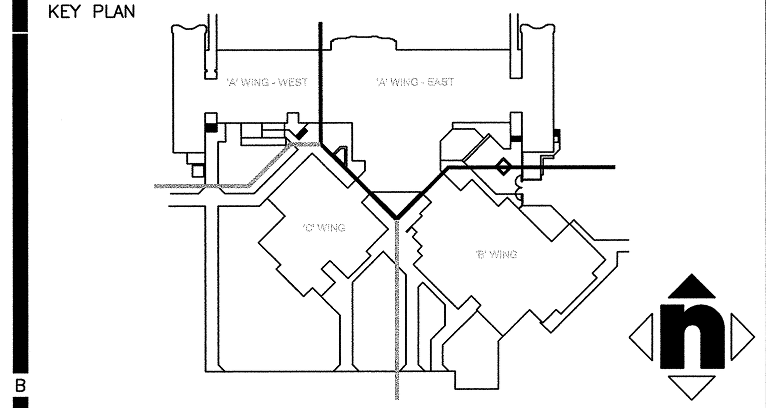

AGENCY APPROVAL

IDENTIFCATION STAMP
DIV. OF THE STATE ARCHITECT
04 - 106133
AC____ FLS____ SS____
DATE____

PROJECT TITLE

SAN BERNARDINO CITY UNIFIED SCHOOL DISTRICT
777 NORTH "F" STREET
SAN BERNARDINO,CA. 92410

RAMONA-ALESSANDRO ELEMENTARY SCHOOL MODERNIZATION
670 RAMONA AVENUE
SAN BERNARDINO, CA 92411

© HMC GROUP 2003

NO.	REVISIONS	DATE	NO.	REVISIONS	DATE
1	DSA ADDENDUM NO. 1	2/10/10			

DRAWING TITLE

DETAILS

ARCHITECT SEAL
LICENSED ARCHITECT CHRISTOPHER RICHARD TAYLOR NO. C-19759 REN. 02-24-11 STATE OF CALIFORNIA

DESIGNED	PROJECT NO.
MRath	3137117
DRAWN	SCALE
MMinamide	AS NOTED
CHECKED	DRAWING NO.
QC	A9.2
DATE 19 MAR 2004	

G:\DGN\3137\117\from sac\A9.2.dwg

PLEASE RECYCLE

" BID ISSUANCE SET"