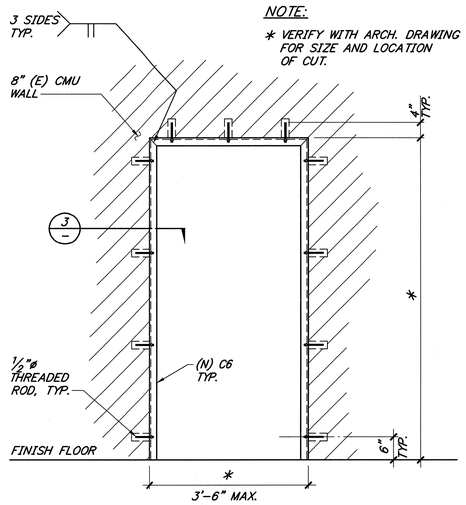

NEW OPENING IN (E) CMU WALL | 3/4" | 1

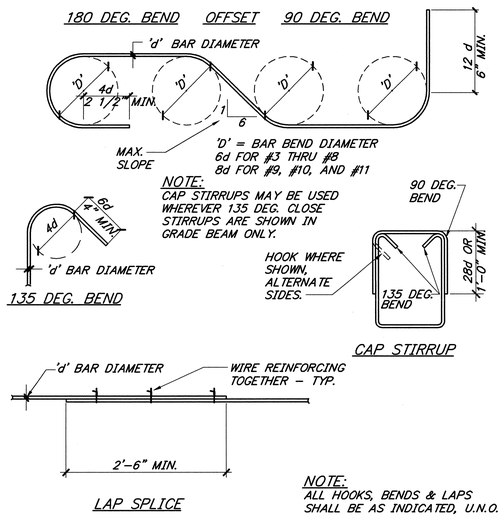

TYPICAL REINFORCING DETAIL | 3/4" | 2

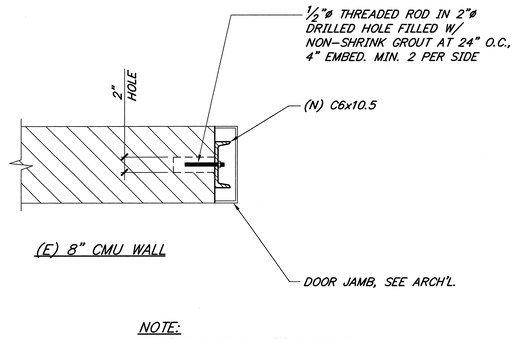

NEW OPENING IN (E) CMU WALL | 3/4" | 3

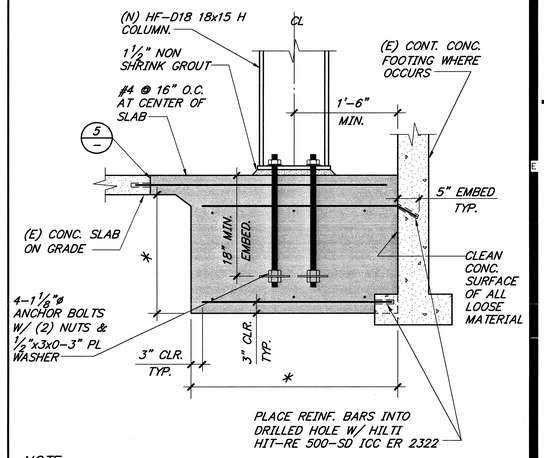

DETAIL | 3/4" | 4

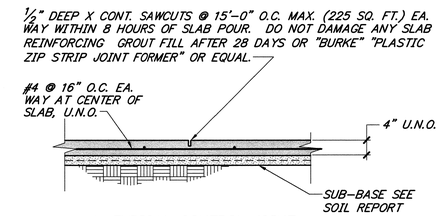

A-TYPICAL CONTROL JOINT
(WHERE CONTINUOUS POUR IS USED)

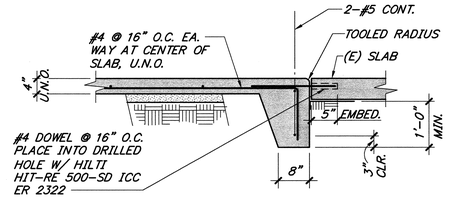

C-TYPICAL EDGE OF SLAB

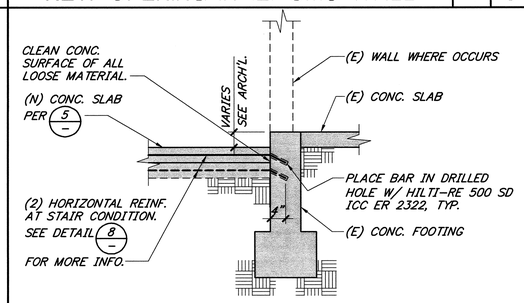

A-SLAB TO FOOTING

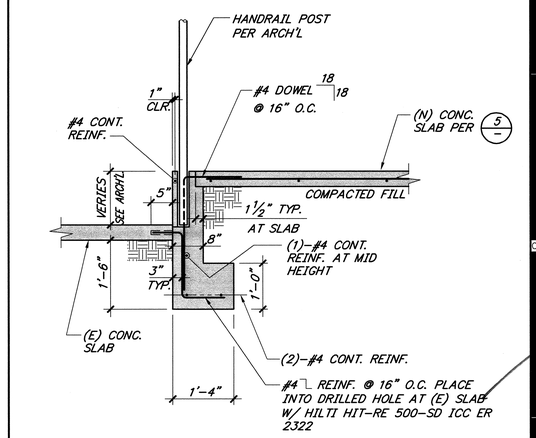

RAMP SECTION DETAIL | 3/4" | 7

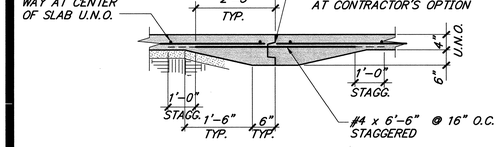

B-TYPICAL CONSTRUCTION JOINT

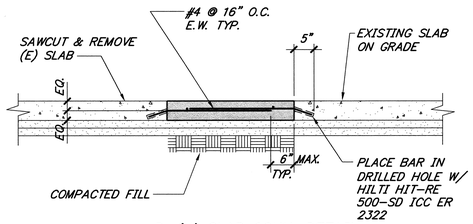

D-(N) SLAB CONN. DETAIL

TYPICAL SLAB ON GRADE DETAIL | 3/4" | 5

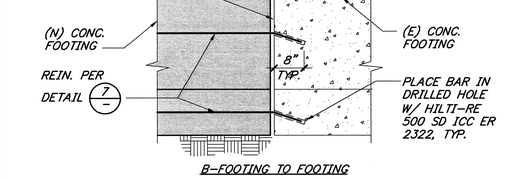

B-FOOTING TO FOOTING

TYP. (N) SLAB TO (E) FOOTING DET. | 3/4" | 6

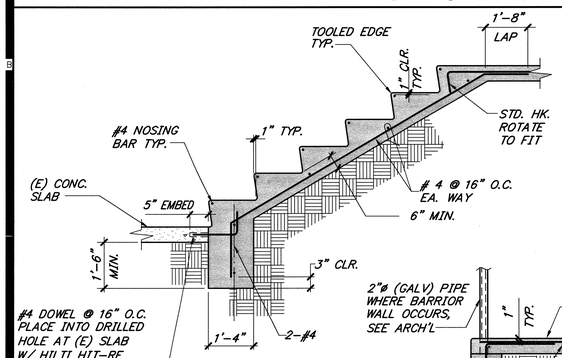

NOTE:
REFER TO ARCHITECTURAL FOR ADDITIONAL INFORMATION: RISE, RUN, FINISH AND EMBEDMENT ITEMS, FINISH, JOINT SPACE, SPECIAL COLOR, ETC.

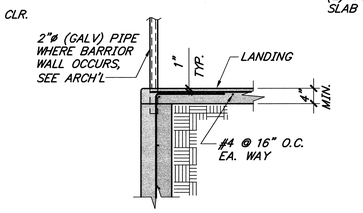

AT LANDING 'B'
SIM. TO CONDITION AT STAIR

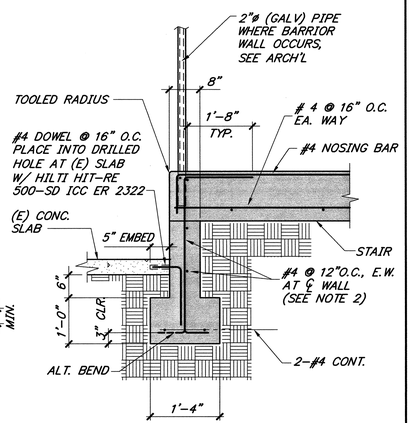

AT STAIR 'A'

TYPICAL STAIR ON GRADE | NONE | 8

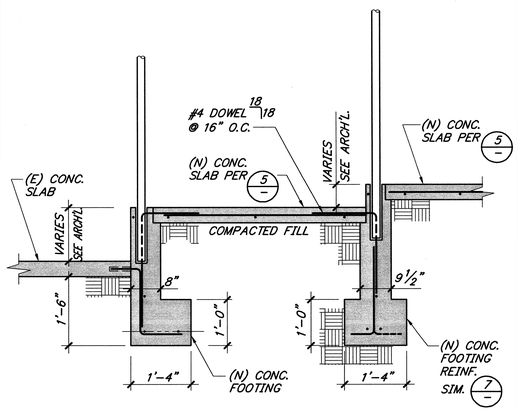

NOTE:
SEE DETAIL 7 FOR INFO. NOT SHOWN

RAMP SECTION DETAIL | 3/4" | 9

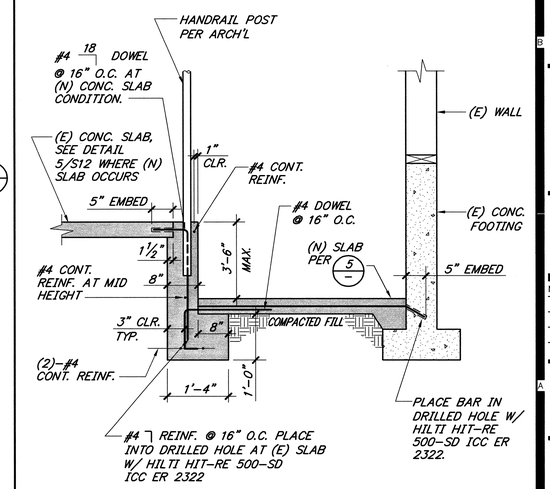

DEPRESSED SLAB AT LIFT | 3/4" | 10

HMC ARCHITECTS
Architecture Interiors Planning
3546 CONCOURS STREET
ONTARIO, CALIFORNIA 91764
Telephone: 909 . 989 . 9979
Fax: 909 . 483 . 1400
www. hmcarchitects .com

CONSULTANT SEAL
REGISTERED PROFESSIONAL ENGINEER TERRY C. TSANG No.52992 Exp. 06/30/2010 STRUCTURAL STATE OF CALIFORNIA

CONSULTANT
TMAD TAYLOR & GAINES
• STRUCTURAL • MECHANICAL • ELECTRICAL • CIVIL
800 North Ferrari Lane, Suite 100
Ontario, California 91764
Phone: 909.477.6915 Fax: 909.477.6919
www.tmadtg.com
Project No. 4009.080.00

KEY PLAN

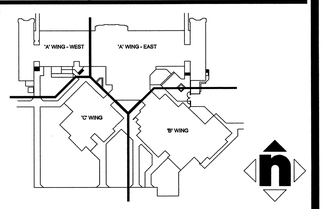

AGENCY APPROVAL

IDENTIFCATION STAMP
DIV. OF THE STATE ARCHITECT
04 - 106133
AC____ FLS____ SS____
DATE____

PROJECT TITLE

RAMONA-ALESSANDRO ELEMENTARY SCHOOL
MODERNIZATION
670 RAMONA AVENUE
SAN BERNARDINO, CA 92411

© HMC GROUP 2003

NO.	REVISIONS	DATE	NO.	REVISIONS	DATE
1	DSA ADDENDUM # 1				2/10/10

DRAWING TITLE

ARCHITECT SEAL
LICENSED ARCHITECT TERRY RIGGS No. C-19759 Exp. 02-28-2011 STATE OF CALIFORNIA

DESIGNED	PROJECT NO.
JC	3137117
DRAWN	SCALE
AM	AS NOTED
CHECKED	DRAWING NO.
TT	S1.2
DATE	
19 MAR 2004	

PLEASE RECYCLE

Feb 05, 2010 - 12:17pm

" BID ISSUANCE SET"

N:\40.CAD\TGProjects\4009_Projects\4009.080\Structural\4009080_S1.2.dwg Fri., 05 Feb. 2010 - 12:17pm Plotted by: dsanchez