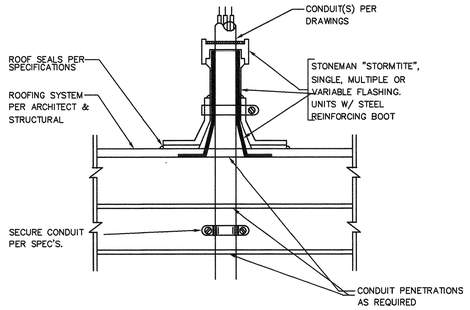

CONDUIT ROOF PENETRATION DETAIL

SCALE N.T.S. | 1

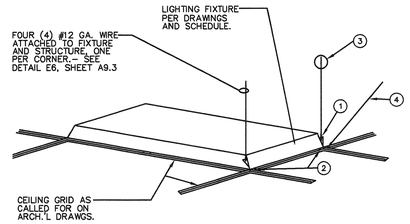

NOTES:

1. ATTACH WIRE TO FIXTURE (3 TIGHT TURNS MIN. IN 1 1/2" MAX.)
2. "TEK" SCREW GRID TO FIXTURE @ EACH CORNER.
3. ATTACH HANGER WIRES TO STRUCTURE AS PER ARCHITECTURAL DETAIL E6, SHEET A9.3. SEE
4. CEILING SYSTEM SPLAY /HANGER WIRES AS OCCUR, SEE PLANS.

RECESSED FIXTURE IN LAY-IN GRID DETAIL

SCALE N.T.S. | 2

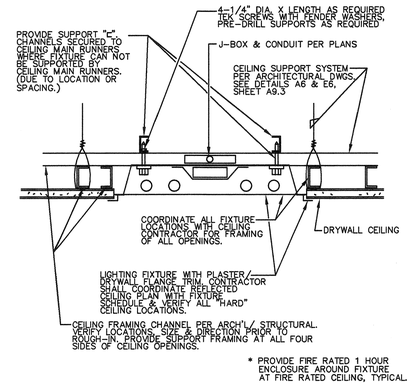

RECESSED FIXTURE IN GYPBOARD CEILING

SCALE N.T.S. | 3

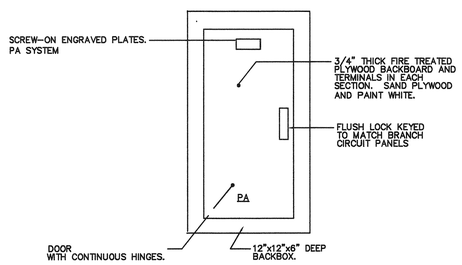

NOTES:

1. REFER TO (5 / E4.1) FOR ATTACHMENT TO THE WALL.
2. REFER TO SHEET E–2.3 FOR LOCATIONS.

COMMUNICATION TERMINAL CABINET "CTC"

SCALE N.T.S. | 4

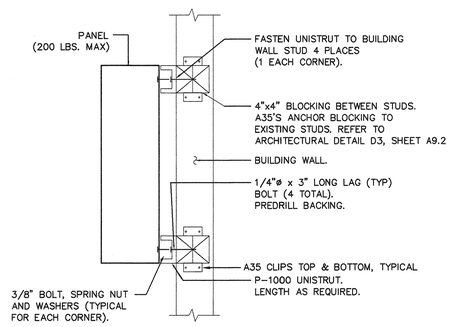

SURFACE MOUNTED PANEL/ CABINET @ WOOD FRAMING

SCALE N.T.S. | 5

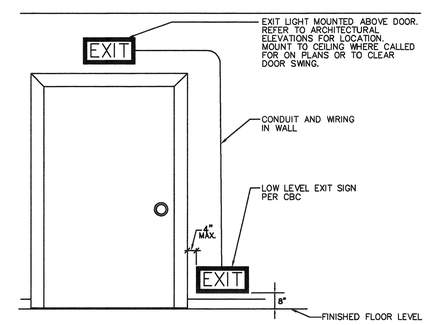

EXIT SIGN AND PATH PLACEMENT DETAIL

SCALE N.T.S. | 6

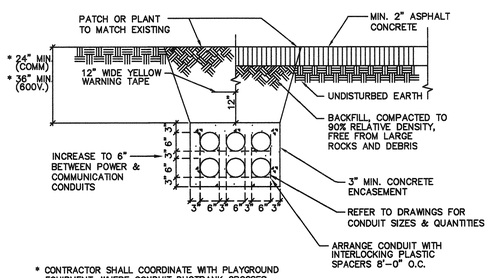

* CONTRACTOR SHALL COORDINATE WITH PLAYGROUND EQUIPMENT, WHERE CONDUIT DUCTBANK CROSSES BELOW, MINIMUM DEPTH TO TOP OF DUCTBANK SHALL BE INCREASED TO 60" BELOW GRADE.

TYPICAL MULTI-CONDUIT PLACEMENT DETAIL

SCALE N.T.S. | 7

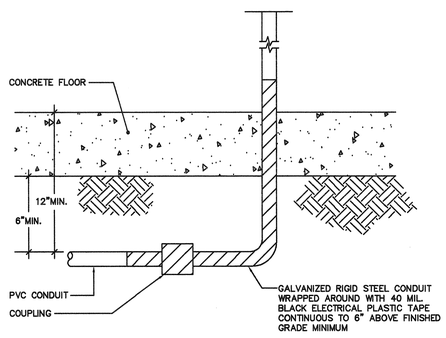

CONDUIT INSTALLED BELOW GRADE TO ABOVE GRADE DETAIL

SCALE N.T.S. | 8

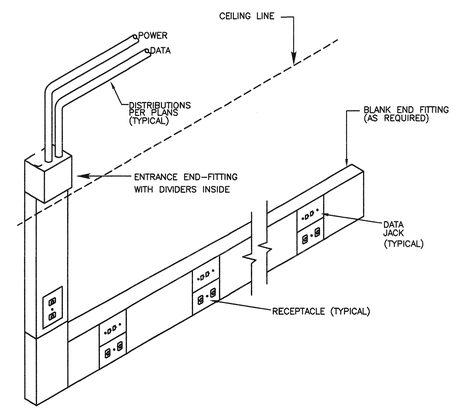

NOTES:

1. CONTRACTOR SHALL PROVIDE AND INSTALL SURFACE RACEWAY SYSTEM AS REQUIRED FOR COMPLETE AND OPERABLE RACEWAY SYSTEM.
2. REFER TO RESPECTIVE FLOOR PLANS FOR QUANTITY AND LOCATION OF OUTLETS AND RACEWAY SYSTEM.
3. MOUNT RACEWAY +15" AFF TO CENTER OF RACEWAY.
4. BACKFEED EXISTING FLUSH MOUNTED OUTLETS USING WIREMOLD CONNECTORS AS REQUIRED.

WIREMOLD #5400 SURFACE RACEWAY

SCALE N.T.S. | 9

HMC ARCHITECTS
Architecture Interiors Planning
300 Capitol Mall, Suite 1230
Sacramento, California 95814
Telephone: 916 . 325 . 1100
Fax: 916 . 325 . 1118

CONSULTANT SEAL

REGISTERED PROFESSIONAL ENGINEER — No. E 17795 — Exp. 9-30-08 — ELECTRICAL — STATE OF CALIFORNIA

CONSULTANT

DONN C. GILMORE & ASSOCIATES, INC.
Consulting Mechanical and Electrical Engineers
631 N. Euclid Avenue
Ontario, Ca. 91762
Ph 909.983.8922
Fax 909.988.2220

KEY PLAN

AGENCY APPROVAL

IDENTIFICATION STAMP
DIV. OF THE STATE ARCHITECT
04-106133
AC FLS/14 SS
DATE DEC 2 8 2007

PROJECT TITLE

SAN BERNARDINO CITY UNIFIED SCHOOL DISTRICT
777 NORTH "F" STREET
SAN BERNARDINO,CA. 92410

RAMONA-ALESSANDRO ELEMENTARY SCHOOL
MODERNIZATION
670 RAMONA AVENUE
SAN BERNARDINO, CA 92411

© HMC GROUP 2003

NO.	REVISIONS	DATE	NO.	REVISIONS	DATE

DRAWING TITLE

ELECTRICAL DETAILS

ARCHITECT SEAL

LICENSED ARCHITECT — CHRISTOPHER RICHARDS — No. C-19759 — Exp. 02-24-09 — STATE OF CALIFORNIA

DESIGNED MJ	PROJECT NO. 31137117–000
DRAWN RL	SCALE NO SCALE
CHECKED JJR	DRAWING NO. E-4.1
DATE	

P:\SBCUSD–Mods\Ramona–Alessandro #20–03142\Dwgs\E\20–03142E41.dwg 12–17–07–4:13 PM

DCGA #20-03142

" BID ISSUANCE SET"